International Journal of Innovative Technology and Exploring Engineering (IJITEE)
ISSN: 2278-3075 (Online), Volume-9 Issue-5, March 2020

GA-SMC Technique for Photovoltaic Systems under Non-Homogenous Meteorological Conditions

Cheikhne Cheikh Ahmed, Mohamed Cherkaoui, Mohcine Mokhlis, Mouad Bahij

Abstract*: When the photovoltaic sources are subjected to the partial shading (PS) effect, the PV modules are consequently subjected to the different levels of the irradiation. Indeed, when the phenomenon of the partial shading occurs, the Power-Voltage curve of the PV panel presents several points of maximum power. These points are divided between local and global, where the global maximum point presents the superior maximum, and the local maximum points present the inferior maximums compared to the global one. In fact, the classical Maximum Power Point Tracking (MPPT) techniques can not distinguish the global maximum power point, but can track only the first maximum found at the right hand of the Power-Voltage curve. Thus, in some cases, the classical techniques can cause the high drop of power. To solve this issue, this paper proposes a new approach based on the genetic algorithm (GA), because of its ability to optimize the solar panels' output power production under the PSC. This optimization method is combined with the robust Sliding Mode Controller (SMC). Here, the GA is used in order to locate and generate the reference voltage corresponding to the global maximum power. While the sliding mode controller is used in order to track the reference voltage by acting on the duty cycle of the SEPIC converter. To examine the performance of the proposed method, the comparison with some hybrid controller, which are P&O-SMC, P&O-BSC, INC-BSC and INC-SMC, is performed. The results show the tracking performances of the proposed method, which are the accuracy and rapidity. Moreover, the results illustrates the ability of the proposed hybrid controller to detect the partial shading and to distinguish the Global Maximum Power Point.

***Keywords:* Backstepping Controller, Genetic Algorithm, Incremental Conductance, Partial shading, Perturb and Observe, Sepic converter, Sliding Mode Controller.**

I. INTRODUCTION

The growth of the environmental pollution has attracted the great concern of the world. In fact, the traditional resources of electricity production, fossil fuels as an example, like natural gas, oil and coal, can product the large amount of CO2 in the atmosphere, which seriously destroys the environmental nature. This dangerous influence has pushed the governments towards the use of the new clean and renewable resources, and they are beginning to lay down strategies aimed at the gradual replacement of fossil resources by other renewable resources.

Until today, many MPPT methods have been proposed, the Perturb and observe method (P&O) that is proposed in [1]-[2], perturbs the operating point of the system, and observes the sign of the derivative of power as a function voltage. The incremental conductance (INC) [3]-[4], is proposed as an improvement of the P&O algorithm under the rapid changes of the irradiation and the temperature. The INC algorithm incrementally comparing the ratio of the conductance derivative with the instantaneous conductance. Effectively, the INC and P&O methods are easy to implement and do not need more space of memory. However, they cause the significant power losses because of their permanently oscillations around the Maximum Power Point (MPP).

Other methods based on the artificial Intelligent have been proposed, such as the Fuzzy Logic Controller (FLC) [5]-[6], and the Artificial Neural Network (ANN) [7]-[8]. The FLC is designed by following some steps, which are the fuzzification, saving the rule base, and the defuzzification. While the ANN is designed by defining the input and output layers, and the hidden layer as well. However, its accuracy depends on the quantity of database necessary for construction. In fact, the P&O, INC, FLC and ANN can just work under the uniform meteorological conditions. Because in this case, the Power-Voltage curve presents only one point of maximum power, which is easy to locate. However, under the partial shading effect, when the Power-Voltage curve presents several maximum power points, these techniques can not distinguish the global maximum. Thus, they cause the considerable drop of power,

In order to address this issue, and to locate the global maximum power point (GMPP) under the partial shading conditions, different methods based on the optimization algorithms have been proposed such as the Particle Swarm Optimization (PSO) [9]-[10], the Genetic Algorithm (GA) [11]-[12], Cucko search [13]-[14] and Ant Colony Optimization (ACO) [15]. These methods scan the entire P-V curve, record all power peaks and define the highest as the global maximum power peak GMPP.

Revised Manuscript Received on March 30, 2020.
* Correspondence Author
Cheikhne Cheikh Ahmed*, Department of Electrical Engineering, Mohammadia School of Engineering, Mohammed V University of Rabat, Rabat, Morocco. Email: cheikhna03@yahoo.fr
Mohamed Cherkaoui, Department of Electrical Engineering, Mohammadia School of Engineering, Mohammed V University of Rabat, Rabat, Morocco. Email: cherkaoui@emi.ac.ma
Mohcine Mokhlis, Department of Electrical Engineering, Mohammadia School of Engineering, Mohammed V University of Rabat, Rabat, Morocco. Emails: mouad.t18@gmail.com
Mouad Bahij, Department of Electrical Engineering, Mohammadia School of Engineering, Mohammed V University of Rabat, Rabat, Morocco. Emails: mohcine.mokhlis@research.emi.ac.ma,

Based on the above analysis, this article provides a smart hybrid GMPPT technique, which consists of the genetic algorithm and the robust sliding mode controller. These two techniques are combined in order to track the GMPP of the PV system under the partial shading conditions. In this method, the first step is to use the GA algorithm to generate the reference voltage corresponding to the global maximum power while the second step is to use the SMC controller to follow this reference by adjusting the duty cycle of the DC-DC converter. The Sliding mode controller is used because of its tracking performances, its robustness against the measurement errors of sensors and its ability for controlling the nonlinear systems.

In order to test the proposed hybrid controller's tracking performances, this controller is compared with the P&O and the INC algorithms combined with the nonlinear following controllers: Backstepping (BSC) and SMC.

This paper is constructed as follows. The second section is dedicated to the overall proposed system modelling, while the section III presents the proposed technique, and the existing controllers. While the simulations results and the conclusion are presented in the last two sections.

II. PHOTOVOLTAIC SOLAR SYSTEM UNDER PSC

The system proposed in this article consists of three components, which are a photovoltaic power source of three 55W modules connected in series and subjected to the different meteorological conditions, see Fig. 1 and Table I, the SEPIC converter, see Fig. 2, and the resistive load.

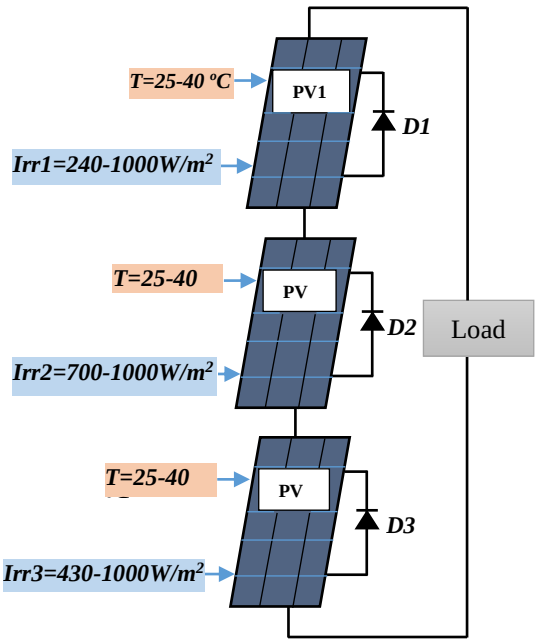

Fig. 1.PV panel under partial shading effect

A. PV panel

A set of solar cells connected in series builds a PV module, and a set of PV modules forms a PV panel. In this study, this one is composed of three modules. Each module can produce a power of $55W$ under the standard conditions (irradiation of $1000/m^2$ and a temperature of $25°C$). Thus, the PV panel used can product a power of $165W$ under the standard conditions. Fig. 3 shows the model of the single diode photovoltaic cell. As can be seen, the photovoltaic cell can be modelled as a current generator in parallel with one diode and two resistors, with the resistor R_s is neglected because of its very low value, and the parallel resistance R_p is considered infinite it presents a high value [16]. The characteristics of the photovoltaic module used are shown in the Table I. The mathematical modeling of the PV module leads to the following expression [17]- [18]:

$$I_{pv} = N_p I_{ph} - N_p I_o [e^{\left(\frac{qV_{pv}}{N_s N_{cell} AKT}\right)} - 1] \quad (1)$$

Where:
N_{cell}: The series cells number.
A: The ideal factor of the PN junction.
$q = 1.6 \times 10^{-19}$ $[C]$: The electron charge,
V_{pv} $[V]$: The output voltage of the PV panel.
I_{pv} $[A]$: The current of the photovoltaic panel.
$K = 1.3805 \times 10^{-23}$ $[J/K]$: The Boltzmann constant.

Table- I: PV panel characteristics

PV parameters	Parameter value
Maximum power (P_{max})	*55 W*
Optimal voltage (V_{opt}) at P_{max}	*17.4 V*
Maximum current Isc (short circuit current)	*3.45 A*
Maximum voltage V_{oc} (Open circuit voltage)	*21.4 V*
Temperature coefficient K_i	$1.4 \times 10^{-3} A/°C$
Number of cell in series N	*36*

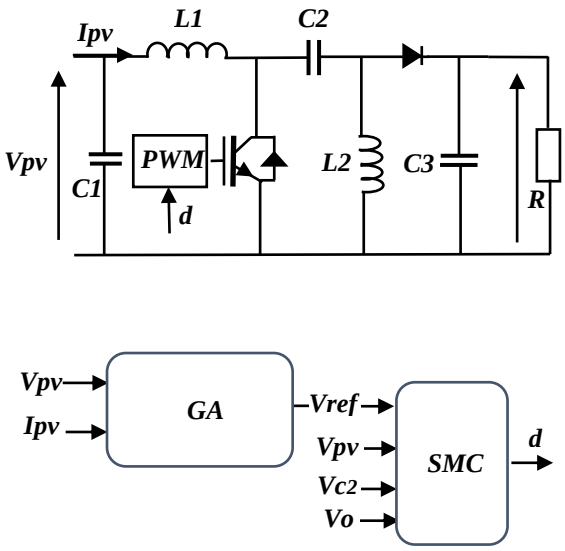

Fig. 2.SEPIC converter and proposed controller

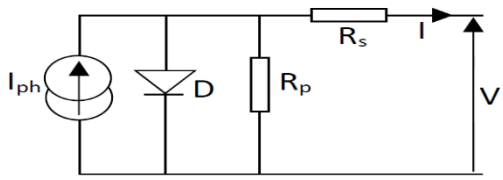

Fig. 3.PV cell

I_{ph} $[A]$ is the photocurrent, it is given by the following formula:

$$I_{ph} = [I_{scr} + (K_i(T - T_r))]\frac{E}{1000} \quad (2)$$

With
K_i *[A/K]* is the temperature coefficient of the short circuit-current, E *[W/m²]* is the solar irradiation, I_{scr} *[A]* is the short-circuit current of the PV module measured under the standard irradiation E_r and temperature T_r.
The reverse saturation current I_o is:

$$I_o = I_{or}(\frac{T}{T_r})^3 e^{(\frac{E_g q}{KA}(\frac{1}{T_r}-\frac{1}{T}))} \quad (3)$$

Where:
T *[K]*: The ambient temperature.
T_r *[K]*: The reference temperature, it is equal *25°C*.
E_G *[eV]*: The bandgap's energy of the photovoltaic cell semiconductor, it is equal to *1.12eV*.

The reverse saturation current I_{or} measured at T_r is:

$$I_{or} = \frac{I_{scr}}{e^{(\frac{qV_{oc}}{KN_sAT})} - 1} \quad (4)$$

With:
V_{oc} *[V]* is the open circuit voltage.

Using (1), the power of the photovoltaic module P_{pv} can be expressed as follows:

$$P_{pv} = I_{pv}I_{ph}V_{pv} - N_pI_oV_{pv}[e^{\left(\frac{qV_{pv}}{KN_sN_{cell}AT}\right)} - 1] \quad (5)$$

B. SEPIC converter

To obtain the global maximum power point, the proposed technique is applied to adjust the duty cycle of the DC-DC converter, which is in this case the SEPIC converter. However, for designing the sliding mode controller, it must first define the state variable of the system to control that is the SEPIC converter, the PV panel and the load, which in this study a resistance of *120 Ω*. After studying the two switching states of the transistor, the following average mathematical model of the SEPIC converter is obtained [21]:

$$\begin{cases} \dot{V}_{pv} = \frac{1}{C_1}I_{pv} - \frac{1}{C_1}I_{L1} \\ \dot{I}_{L1} = \frac{1}{L_1}V_{pv} - \frac{1}{L_1}(1-d)(V_{C2} + V_o) \\ \dot{V}_{C2} = \frac{1}{C_2}(1-d)I_{L1} + d\frac{1}{C_2}I_{L2} \\ \dot{I}_{L2} = d\frac{1}{L_2}V_{C2} - (1-d)\frac{1}{L_2}V_o \\ \dot{V}_o = \frac{1}{C_3}(I_{L1} + I_{L2})(1-d) - \frac{1}{C_3R}V_o \end{cases} \quad (6)$$

III. CONVENTIONAL MPPT AND PROPOSED GA-SMC GMPPT METHODS

The MPPT techniques are considered important for improving the efficiency of the PV system. Several techniques are proposed in the literature, this section presents some of the most used methods, which are the perturb and observe, the incremental conductance and the hybrid controller as well, which are the P&O combined with Backstepping controller [19], the INC combined with the Backstepping controller [20], and some other methods.

A. Perturb and observe (P&O) method

The Perturb and Observe (P&O) is an iterative MPPT method widely used in literature due to its simplicity for implementation. This method perturbs the duty cycle of the DC-DC converter depending on the sign of $\Delta P_{pv}/\Delta V_{pv}$, and consequently disturbs the voltage of the PV panel. So, when $\Delta P_{pv}/\Delta V_{pv} > 0$, the duty cycle should increase by the small step ΔD but when $\Delta P_{pv}/\Delta V_{pv} < 0$, the duty decrease by the same step. Consequently, the system still oscillating around the Maximum Power Point (MPP). In addition, this algorithm is unable to specify the correct direction of disturbance if the atmospheric conditions change rapidly. The flowchart of this method is illustrated in Fig. 4.

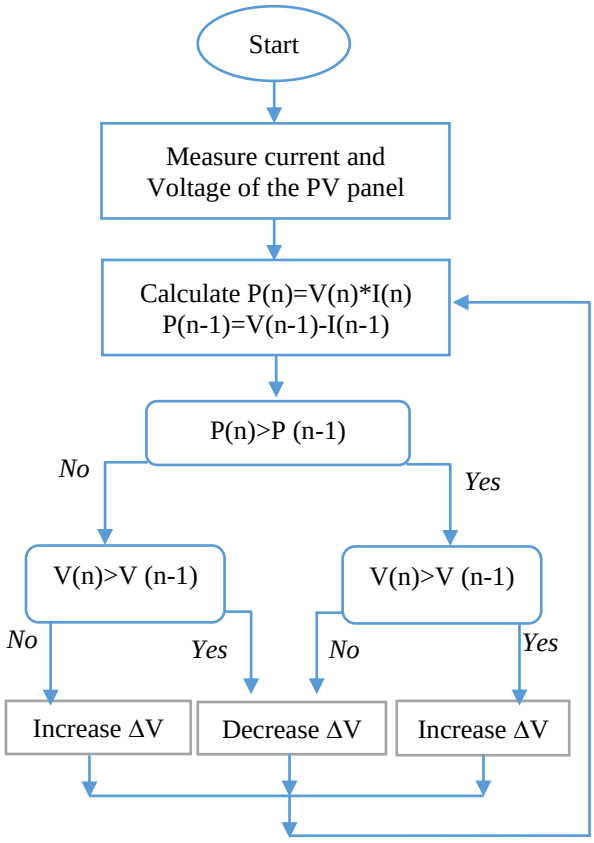

Fig. 4.P&O algorithm

B. Incremental conductance (INC) method

The incremental conductance method (INC), see Fig. 5, is another conventional iterative MPPT method, which is developed to eliminate the gaps encountered in the P&O algorithm. INC method is more efficient compared to the P&O method in terms of tracking accuracy, tracking speed, and overall system efficiency.

However, the INC method is more complex and more sensitive to noise and errors in the measured control values. This method is mainly based on the fact that the derivative of the output power of the photovoltaic panel with its voltage is zero.

C. Proposed GA-SMC GMPPT method

The proposed method consists of two control blocs, the first one is the genetic algorithm (GA), this one is designed to generate the optimal voltage corresponding to the global maximum power point. It can also detect the partial shading. Thus, after any change of the meteorological conditions, the GA start searching the new optimal voltage. The second bloc is the sliding mode controller that is designed to follow the optimal reference voltage generated by the GA by acting on the duty cycle of the SEPIC converter. Thus, this allows to the system to operate at the maximum possible of power. In the following subsections, both the Genetic Algorithm and the Sliding Mode controller will be presented in detail.

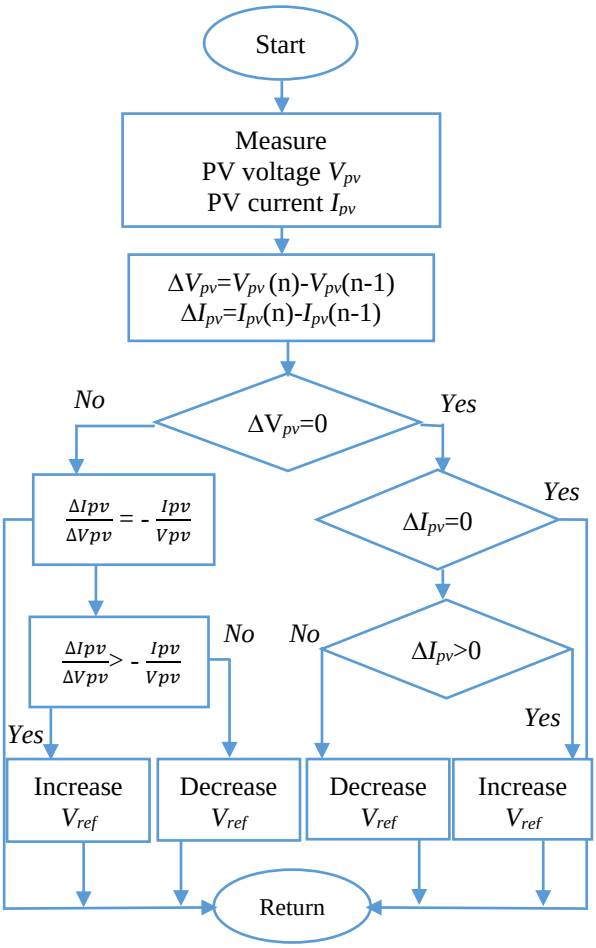

Fig. 5.INC algorithm

1) Genetic Algorithm

The genetic algorithm (GA) is an optimization technique based on the biological reproduction. The principle of the algorithm is based on the survival of the strongest individuals in the population that they have a higher probability of producing children.

The GA procedure is shown in the following:

1. Identification of the objective function to quantify the aptitude of each candidate solution.
2. Initialize and randomly transmit the population.
3. Assess the physical fitness of each individual based on the objective function.
4. Generate a new population using the following genetic operations:
   - Selection: select the individuals used to create the new generation based on their physical abilities.
   - Crossing: creation of new individuals by recombination of two chosen parents.
   - Transfer: randomly change a selected part of the new individual with very low probability.
   - Integration: The new population will be integrated into the old to replace individuals with the minimum capacity, therefore a new generation with the same number of individuals.
5. Stop the algorithm when the stop criterion is satisfied or the number of generations is reached.

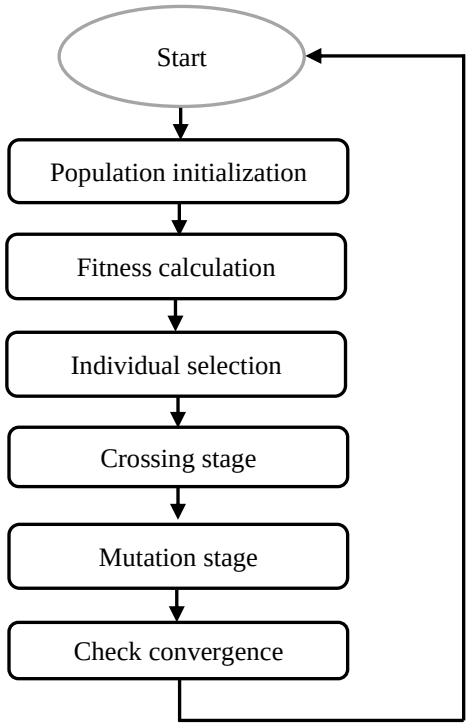

Fig. 6.Genetic algorithm flowchart

Several tests have been carried out to choose an iteration number that balances the processing time and the optimal results. The flowchart of this algorithm is illustrated in Fig. 6. In this paper, the objective function is to extract the global maximum power of the PV module, under any weather condition. The optimal voltage of the PV module is limited between 0V and Voc.

To start the GA process an initial population vector is chosen to cover this interval. This interval is the space for finding the optimal voltage corresponding to the overall power GMPP. The initial population is a vector composed of *4* individuals [V_1, V_2, V_3, V_4]. These individuals are successively transmitted in the form of voltages to the DC-DC converter. Each particle is treated, and its corresponding power is measured and stored.

After that, the particle that presents the superior maximum will be considered as a desired voltage, all the particles will then optimized until the global maximum point is reached.

After testing all the individuals of the generation, the selection is made by elitism. The crossing is done by combining two individual parents to give birth to a child. This step is based on the following equation:

$$V_i(n) = rand(1)V_i(n-1) + (1 - rand(1))Vj(n-1) \quad (7)$$

The mutation is performed with a very low probability. This step makes a random change in individuals using (8).

$$V_i(n) = V_{min} + rand(1)(V_{max} - V_{min}) \quad (8)$$

Where V_{min}, V_{max} are respectively the minimum and maximum voltages in the search space.

The algorithm has been modified by resetting the initial population each time it detects a change in the temperature or the irradiation. So, the AG is reset when the following two conditions are met:

$$|V(n+1) - V(n)| \prec \Delta V \quad (9)$$

$$\left| \frac{P_{pv}(n+1) - P(n)}{P_{pv}(n)} \right| \succ \Delta P \quad (10)$$

2) Sliding Mode Controller Design

The SMC controller is responsible for allowing the PV panel output voltage to follow the reference voltage, which is generated by using the GA algorithm. The sliding mode controller is robust against the system's parameters changes and the measurement errors of sensors, also it can control the nonlinear systems, and it presents the good tracking performances.

When designing the SMC, it must define the output *y* and the output reference y_{ref}. In this article, the photovoltaic voltage is considered V_{pv} as the output y, while the reference *voltage* V_{ref}, generated by the GA algorithm, is considered as the reference output y_{ref} to track. After that, to design the SMC, it should follows the following steps:

First step consists for defining the sliding surface:

$$s = (\lambda + \frac{d}{dt})e^{r-1} \quad (11)$$

With:

e is the tracking error, it is equal V_{pv} - V_{ref} and *r* is the relative degree *e*.

The derivative of output *y* is:

$$\dot{y} = \frac{1}{C_1} I_{pv} - \frac{1}{C_1} I_{L1} \quad (12)$$

Using (6) and (12), the second derivative of *y* can be expressed as follows:

$$\ddot{y} = \frac{1}{C_1} I'_{pv} - \frac{1}{L_1 C_1}[V_{pv} - (1-d)(V_o + V_{C2})] \quad (13)$$

As can be seen in (13), the input control *d* (duty cycle) has appeared after two successive derivations of the output y. Thus, the relative degree r is equal to 2. Consequently, the sliding surface shown in (11) will be as follows:

$$s = (\lambda + \frac{d}{dt})e \quad (14)$$

Thus,

$$s = \lambda e + \dot{e} \quad (15)$$

The time derivative of the sliding surface (*s*) can be expressed as follows:

$$\dot{s} = \lambda \dot{e} + \ddot{e} \quad (16)$$

Where, the first time derivative of the tracking error *e* is:

$$\dot{e} = \dot{y} - \dot{y}_{ref} = \dot{V}_{pv} - \dot{V}_{ref} \quad (17)$$

The second time derivative of e can be expressed as follows:

$$\ddot{e} = \ddot{y} - \ddot{y}_{ref} = \ddot{V}_{pv} - \ddot{V}_{ref} \quad (18)$$

Replacing (13) in (18) the following expression can be obtained:

$$\ddot{e} = \frac{1}{C_1} I'_{pv} - \frac{1}{L_1 C_1}[V_{pv} - (1-d)(V_o + V_{C2})] - \ddot{V}_{ref} \quad (19)$$

Considering $\dot{V}_{ref}$ and $\ddot{V}_{ref}$ equal to zero and replacing (17) and (19) in (16), the time derivative of the sliding mode surface will be:

$$\dot{s} = \lambda \dot{V}_{pv} + \frac{1}{C_1} I'_{pv} - \frac{1}{L_1 C_1}[V_{pv} - (1-d)(V_o + V_{C2})] \quad (20)$$

Knowing that, to ensure the stability of system, the first time derivative of *s* should be:

$$\dot{s} = -ksigne(s) \quad (21)$$

Consequently, by replacing (21) in (20), the (22) can be obtained:

$$-ksigne(s) = \lambda \dot{V}_{pv} + \frac{1}{C_1} I'_{pv} - \frac{1}{L_1 C_1}[V_{pv} - (1-d)(V_o + V_{C2})] \quad (22)$$

Finally, the control law, which is the duty cycle d, can be found:

$$d = \frac{L_1 C_1}{V_o + V_{C2}}[\lambda \dot{V}_{pv} + \frac{1}{C_1} I'_{pv} - \frac{1}{L_1 C_1}[V_{pv} - (V_o + V_{C2})] + ksigne(s)] \quad (23)$$

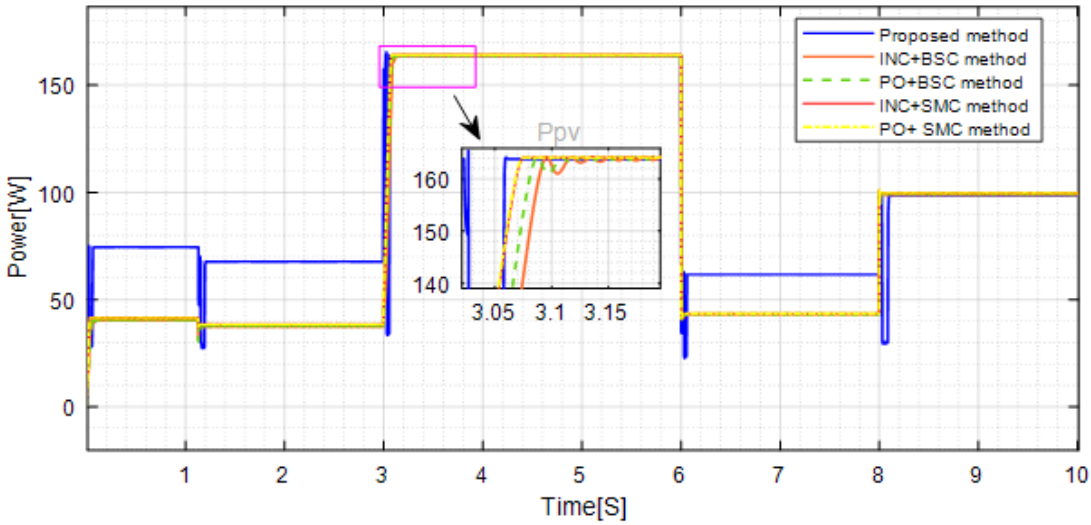

Fig. 7.PV power using the proposed GA-SMC technique compared with some existing MPPT methods

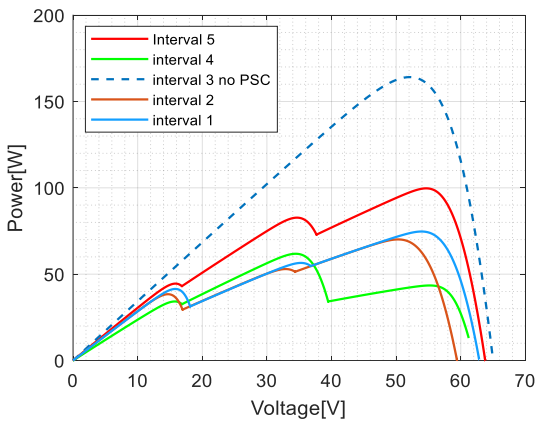

Fig. 8.Result of P-V curve under PSC conditions

IV. RESULT AND DISCUSSION

To assess the performance of the proposed method, the SEPIC converter is used. The parameters of this converter are as follows: Inductors' inductances $L_1=0.35mH$ and $L_2=0.35mH$, the capacitors' capacitances $C_1=440\mu F$ and $C_2=440\mu F$, the output capacitor capacitance $C_3=470\mu F$, and the load resistor $R=120\Omega$. The photovoltaic generator used comprises three photovoltaic panels connected in series, as illustrated in Fig. 1. The simulation is performed considering the meteorological conditions are not homogeneous nor constant over time.

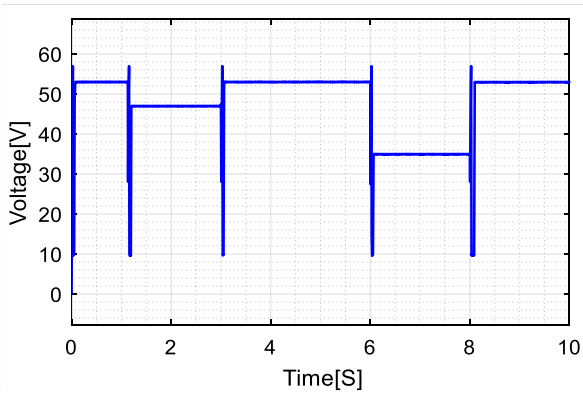

Fig. 9.PV voltage

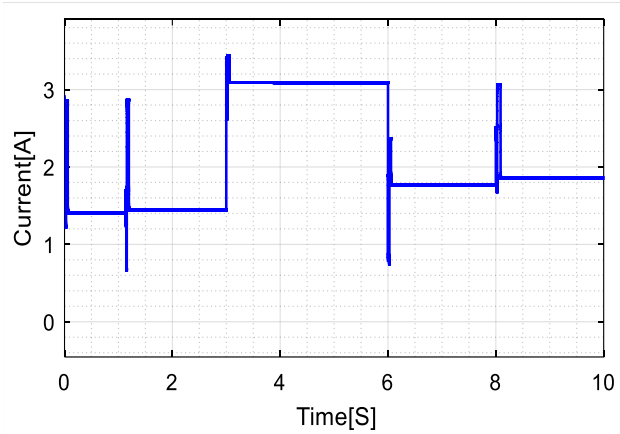

Fig. 10.PV current

In the time interval [*3s*, *6s*], the PV panel receives the uniform ambient conditions (Temperature of *25°C* and irradiation of *1000W/m²*). In the other time intervals, the temperature is considered constant, and proposed equal to *25°C*, while the irradiation is considered not uniform. These times intervals are chosen in order to test the proposed technique ability to work under the uniform condition and under the partial shading effect. The Power-Voltage curve, of the PV panel used under the meteorological conditions previously discussed, presents several points of maximum power, see Fig. 8.

The proposed method is compared with four other methods, which are the P&O combined with SMC, P&O combined with BSC, INC combined with SMC and INC combined with BSC.

The results illustrated in Fig. 7 show that in some cases, the hybrid controllers can be more rapid than the proposed method under the uniform meteorological conditions. However, these controllers present more oscillations around the maximum power point because of the perturbation steps of the INC and P&O algorithms used. Moreover, under the partial shading effect, these controllers cause high drop of power anytime when the partial shading occurs.

While the proposed controller has shown its ability to detect the partial shading and to distinguish and track the global maximum power point, which consequently improves the PV system efficiency under the partial shading phenomenon. Fig. 9 and Fig. 10 show the PV voltage and current. So, as depicted in this figure, it can be noted that these parameters remain at the accepted limits.

V. CONCLUSION

In this paper, a new GMPPT technique, based on the genetic algorithm and the sliding mode controller, is proposed. The genetic algorithm is used in order to locate the global maximum power point and return the corresponding optimal voltage, this method has shown its ability to distinguish the global maximum power point as affirm results, while the sliding mode controller is used because of its robustness and tracking performances, which are rapidity and accuracy. The results demonstrate that this method works better than the P&O-SMC, P&O-BSC, INC-BSC and INC-SMC. The results has proven that these hybrid controllers makes oscillations around the maximum power point and fall finding the true maximum in some cases, consequently cause the considerable drop of power. While, the proposed hybrid controller that is GA-SMC has proven its ability to work under the changed meteorological conditions, which can be uniform and non-uniform. Consequently, the proposed controller can work properly inside of the existing hybrid MPPT controllers. The future work will be focused on the experimental implementation of the proposed technique.

REFERENCES

1. P. Mohanty, G. Bhuvaneswari, R. Balasubramanian, and N. K. Dhaliwal, “MATLAB based modeling to study the performance of different MPPT techniques used for solar PV system under various operating conditions,” *Renewable and Sustainable Energy Reviews*, vol. 38, Oct. 2014, pp. 581–593.
2. A. K. Abdelsalam, A. M. Massoud, S. Ahmed, and P. N. Enjeti, “High-Performance Adaptive Perturb and Observe MPPT Technique for Photovoltaic-Based Microgrids,” *IEEE Transactions on Power Electronics*, vol. 26, no. 4, Apr. 2011, pp. 1010–1021.
3. A. Safari and S. Mekhilef, “Simulation and Hardware Implementation of Incremental Conductance MPPT With Direct Control Method Using Cuk Converter,” *IEEE Transactions on Industrial Electronics*, vol. 58, no. 4, Apr. 2011, pp. 1154–1161.
4. Kok Soon Tey and S. Mekhilef, “Modified Incremental Conductance Algorithm for Photovoltaic System under Partial Shading Conditions and Load Variation,” *IEEE Transactions on Industrial Electronics*, vol. 61, no. 10, Oct. 2014, pp. 5384–5392.
5. F. Chekired, C. Larbes, D. Rekioua, and F. Haddad, “Implementation of a MPPT fuzzy controller for photovoltaic systems on FPGA circuit,” *Energy Procedia*, vol. 6, 2011, pp. 541–549.
6. S. Karthika, K. Velayutham, P. Rathika, and D. Devaraj, “Fuzzy Logic Based Maximum Power Point Tracking Designed for 10kW Solar Photovoltaic System with Different Membership Functions,” *International Journal of Electrical, Computer, Energetic, Electronic and Communication Engineering*, vol. 8, no. 6, 2014, pp. 1013–1018.
7. Y.-H. Liu, C.-L. Liu, J.-W. Huang and J.-H. Chen, “Neural-network-based maximum power point tracking methods for photovoltaic systems operating under fast changing environments,” *Solar Energy*, vol. 89, Mar. 2013, pp. 42–53.
8. S. A. Rizzo and G. Scelba, “ANN based MPPT method for rapidly variable shading conditions,” *Applied Energy*, vol. 145, May 2015, pp. 124–132.
9. R. Eberhart and J. Kennedy, “A new optimizer using particle swarm theory,” in *MHS’95. Proceedings of the Sixth International Symposium on Micro Machine and Human Science*, 1995, pp. 39–43.
10. K. Ishaque and Z. Salam, “A Deterministic Particle Swarm Optimization Maximum Power Point Tracker for Photovoltaic System under Partial Shading Condition,” *IEEE Transactions on Industrial Electronics*, 2012, pp. 1–10.
11. Y. Shaiek, M. Ben Smida, A. Sakly, and M. F. Mimouni, “Comparison between conventional methods and GA approach for maximum power point tracking of shaded solar PV generators,” *Solar Energy*, vol. 90, , Apr. 2013, pp. 107–122.
12. M. Bechouat, Y. Soufi, M. Sedraoui, and S. Kahla, “Energy storage based on maximum power point tracking in photovoltaic systems: A comparison between GAs and PSO approaches,” *International Journal of Hydrogen Energy*, vol. 40, no. 39, Oct. 2015, pp. 13737–13748.
13. J. Ahmed and Z. Salam, “A soft computing MPPT for PV system based on Cuckoo Search algorithm,” in *4th International Conference on Power Engineering, Energy and Electrical Drives*, 2013, pp. 558–562.
14. J. Ahmed and Z. Salam, “A Maximum Power Point Tracking (MPPT) for PV system using Cuckoo Search with partial shading capability,” *Applied Energy*, vol. 119, Apr. 2014, pp. 118–130.
15. L. L. Jiang, D. L. Maskell, and J. C. Patra, “A novel ant colony optimization-based maximum power point tracking for photovoltaic systems under partially shaded conditions,” *Energy and Buildings*, vol. 58, Mar. 2013, pp. 227–236.
16. C. Cheikh Ahmed, M. Cherkaoui, and M. Mokhlis, “MPPT Control for Photovoltaic System using hybrid method under variant weather condition”, In: *Proc. of International Conference on Wireless Technologies, Embedded and Intelligent Systems*, Fez, Morocco, 2019, pp. 1-5.
17. M. Mokhlis, M. Ferfra, and M. Chraygane, “Nonlinear Control of a Photovoltaic Pumping System under Partial Shading”, In: *Proc. of 2017 International Renewable and Sustainable Energy Conference (IRSEC)*, Tangier, Morocco, pp. 1-7, 2017.
18. M. Mokhlis, and M. Ferfra, “Optimization of Photovoltaic Panels Efficiency Using a Backstepping Control Technique Under Partial Shading Conditions”, *International Review on Modelling and Simulations*, Vol.10, No.36, pp.437-446, 2017.
19. E. i. Rafika, A. Abbou, M. Mohcine, and M. Salimi, “A comparative study of MPPT controllers for photovoltaic pumping system”, In: *Proc. of the 9th International Renewable Energy Congress*, Hammamet, Tunisia, pp.1-6, 2018.
20. A. Taouni, A. Abbou, M. Akherraz, A. Ouchatti and R. Majdoul, "MPPT design for photovoltaic system using backstepping control with boost converter," In: *Proc. of International Renewable and Sustainable Energy Conference*, Marrakech, 2016, pp. 469-475.
21. M. Mokhlis, M. Ferfra, A. Abbou, and R. El idrissi, “Robust Control for Photovoltaic System Under Partial Shading Effect Using the SEPIC Converter”, International Journal of Renewable Energy Research, Vol.9, No.2, pp.684-691, 2019.