International Journal of Innovative Technology and Exploring Engineering (IJITEE)
ISSN: 2278-3075 (Online), Volume-9, Issue-7, May 2020

Multi-Domain Network Monitoring System for End-to-End Connectivity

Sheena Garg, Manjunath A E

***Abstract:** With the growing scale size of networks and the complexities that follow, there is an increasing need for an end-to-end network management system for efficient monitoring of the system and having the best-in-class security, performance, and management features. This paper proposes an integrated network monitoring system that provides a single-window operation for end-to-end network management. The system is operated as a web application for stand-alone functioning. This eliminates most the dependencies, chances of failure and additional requirements that may lead to increased cost and decreased performance. The proposed system uses JavaScript for frontend and DHTMLx3.0 for the User Interface. Backend works on Java, Ajax, Hibernate, Apache Tomcat (webserver), Apache ActiveMQ (message queue), MTOSI (Multi-Technology Operations System Interface), CORBA TMF 814 and WebSwing. The different network technologies used and supported by the system for functioning are RADIUS (Remote Authentication Dial-In User Service), MPLS-TP, SDH, SONET, ONT, and GPON.*

***Keywords**: NMS, Hibernate, Web-Application, Network Management System, Standalone-System*

I. INTRODUCTION

The Network Management Systems are those set of applications which help the user to access and control the different components of the network under scrutiny inside a bigger network that it might be a part of. The network comprises both hardware and software components. Network Monitoring Systems (more commonly known as Network Management Systems) usually focus on the software requirements of the network and its enhanced usage. It provides us with simple software with a user-friendly user interface to manage the network. With the advent of technology and a rapid increase in the scale size of networks, dealing with Network Management Systems became an integral part for easy access to the networks and carrying out the sophisticated tasks relating to the complex networks prevailing in the industry. They facilitate easy provisioning of services with enhanced security and single window operation for all of the features on the network.

Revised Manuscript Received on May 30, 2020.
***** Correspondence Author
Sheena Garg*, Department of Computer Science and Engineering, RV College of Engineering, Bangalore, India. Email: sheenagarg.9@gmail.com
Dr. Manjunath A E, Department of Computer Science and Engineering, RV College of Engineering, Bangalore, India. Email: aemanju@gmail.com

Each feature may or may not be deployed its own separate API call for controlling, mapping and executing the different tasks performed by the Network Management System. However, there are some reported disadvantages with these software systems. With the open connectivity, uneven terminal computer distribution, there is always a chance of human negligence, fault and technical weaknesses leading to errors in such a widely distributed network system, whether on a local area network or wide area network. Since these systems are a stop platform for all the network information and the data being transported between different platforms, they tend to be at the higher risk side of being affected by malicious virus or software, leaving the networks prone to being attacked by hackers which would incur high losses in terms of both money and data. This rising trend has led to incorporating the highest security parameters and better security protocols in place in these Network Management Systems for enhanced security.

II. LITERATURE SURVEY

As networks grew substantially in size and number, it became complex and challenging to manage them manually. The development of Network Management Systems reduced the burden on the administrator as well as the user to manage and use the networks by greatly simplifying the operations. They usually report data from nodes or other network points and consolidates it in readable information to present to the system administrator or the user.

Most of the NMS help perform one or more of the following operations in a user-friendly manner.

- Mapping/Discovery: The protocols defined usually help to identify the nodes in the network, their connectivity, operation, performance characteristics and relating them to the services for full capacity utilization.
- Monitoring: The network system may pull information about the system from time to time to help resolve any conflicts arising during the normal functioning of the software. Different techniques such as SNMP Trap may be used for registering itself for alerts from the network devices and record information and data during hazards.
- Provisioning: This feature helps in providing sufficient resources for the new networks that may be incorporating in the existing one or if new requirements arise. Using an automated approach generally eliminates human error but introduces the chances of technical errors which might cause errors at a later stage.
- Cyber Security: A good NMS provides sufficient checks for each of the operations so that they are less prone to data manipulation and data loss to unauthorized personnel.

In [1], Rafiullah Khan proposed a systematic network management system that used an instinct-based algorithm that brings any conflict arising in the system to the notice of the network administrator. The software used by the system is Nagios and Request Tracker (RT) for configuration and the monitoring of the required network topology. Whenever there is any change in the state of any node in the network, the system triggers notifications and subsequent tickets are generated for each of these notification alerts. These tickets are then sent via an email or text message to the network administrator. This leads to a very efficient and user-friendly system for the network administrator as he can manage and view the entire network through his mailbox.

In [2], Yongium and Dingfu suggested a system that uses database technology used in the management of the network for information processing in networks. The paper works around highlighting the advantages of using a database-centric network management mode in providing stable, uniform, and effective operation of the system. It also highlights the need for better performance, configuration, accounting, fault management and security for the development of NMS for businesses.

In [3], Du Shiyu talks about an NMS concerning a distributed network that was developed on a J2EE platform. This ensures that the system can be handled remotely because of the simplified User Interface. The proposed system provides other benefits of enhanced simplicity, simplicity and ease of handling the networks through the NMS.

In [4], Choi and Lee analyzed JDBC (Java Database Connectivity) and Java and suggested effective integration methods for the designing and implementation of a network monitoring and analysis system. The suggested system is platform-independent and used a solitary single Web interface for generating several categories of statistical information.

In [5], Pandey and Rastogi introduced a web-based network management system in which the basis of implementation is a J2EE platform. The technologies used in the proposed system provide reliable, convenient and simple techniques for network management. They greatly improve the security, flexibility, performance, simplicity, and convenience as it can be accessed anywhere and allows concurrent usage by multiple users.

III. FEATURES AND ADVANTAGES

The system has support for provisioning, operations, and management of various kinds of services such as DWDM (Dense Wavelength Division Multiplexing), Packet Transport Networks, OTN (Optical Transport Network) and SDH (Synchronous Digital Hierarchy).

This enables the network administrator to effectively control the multi-technology networks in a unified manner. The network management system also provides support for complex data transmission features such as MPLS-TP (Multiprotocol Label Switching – Transport Profile), Ethernet OAM (Operations, administration, and management) and 50ms protection for ring and linear paths. This enables the system to operate on maximum packet capacities for each of the network elements.

The proposed network management system is capable of scaling thousands of network elements which is possible because of the advanced and instinctive user interface, helping the teams to reduce operational costs to an optimized value through faster and more efficient operations. To make an easier analysis of the network and the nodes (elements) operating on it, the system organizes the feature sets of all the nodes in the network to have intuitive management. To ensure uninterrupted services even in case of extreme network conditions, the system automatically restores the one or more network failures. Since the network management system allows multiple windows to be accessed for the same network enabling concurrent use, this helps the administrator to understand the different parts and views of the network and decide accordingly for its smooth operations to continue.

The key benefits of the proposed network management system are as follows:

1. Integrated Management: As discussed above, the system incorporates the different service such as DWDM, SDH, OTN and PTN profiles into a single management system. The system is capable of analysing parallel TDM & PDH deployment models or TDM overlayed with PTN and understands them for enhanced user experience. Hence, the administrator only views an end-point based PTN network where the links can be a combination of Ethernet over TDM. The Packet Network View in this case shows only the logical links.

2. Partitioning: To manage large-sized networks, user-defined partitions can be created to divide the networks into subsets assigned to each partition. This helps in easy addition, deletion of bulk nodes and supports provisioning of circuits per partition. User notification systems such as alerts, alarms, and data concerning performance from the past are accessible and can be analysed for each partition.

3. Point and Click Provisioning: Provisioning through drag and drop functionality between two endpoints. The system is designed to calculate the minimum cost path considering criteria such as the number of jumps or links. To provide the administrator a workflow for provisioning and commissioning a network circuit, the network management system provides a display of the circuits as Planned, Provisioned or Pending.

4. MPLS-TP Services: The system provides functionality to provision MPLS-TP based VPLS services. A pool of options for these services are enabled giving the system a more flexible approach for different deployment models. The different options for VPLS services are – full mesh of pseudowires or a hub and spoke model (H-VPLS). Furthermore, protected and unprotected are the two functionalities provided to the pseudowires, additionally with spanning multiple tunnels, multi-segmented, or stitched coupled with manual and auto path selection. There is coherent arrangement of native-ethernet links and Ethernet-over-TDM support. The ease of single-click activation and deactivation of services has been incorporated into the system. There is automatic mapping of alerts and alarms with Links and Services by the Network Management System.

5. QOS Management: Features for managing QoS (Quality of Service) for all kinds of services supported in the NMS have been added. The network management system segregates the entire network into either QoS or Non-QoS Domain. Invalid packets, that are either not meeting the bandwidth profiles are to be dropped. Connection admission control provides this functionality or marks them to be deleted later if any congestion arises in the network.

6. Views: The proposed system permits multiple displays for viewing and administering the different parts of the network. The default management view shows all of the EMS (Element Management System) present in the concerned network. There are different Network Views for partitions and nodes displaying the respective sets in the network and partitions respectively. Resource Management View is typically to organize and access the services, nodes, partitions through the different operations possible on them. Graphical view of Carrier Ethernet network demonstrates Ethernet services, pseudowires, MPLS-TP tunnels, physical tunnels and protection paths along with the work done on them. This is essential to get a quick view of the network and provide ease of management to the administrator.

7. Fault Management: There is real-time representation of alarms and faults in the network, the alarms being categorized as Major, Minor or Critical. Grouping of the Alarms is possible is Node, EMS, Partition, Severity, and other parameters. These alarms enable the user to recognize the affected circuits. Downloadable list of these alarms in the form of CSV, HTML, XML, or PDF file for offline analysis is also supported by the network management system. This correlation of alarms to different components of the network helps optimize the information overload on the administrator as it suppresses the secondary alarms, displaying only the primary ones at a critical moment in network management and operation.

8. Performance Management: The system is capable of pulling out real-time execution data from network elements and display it in different formats. The provision of 15 min/24-hour monitoring/collection of the data can be disable or enabled by the administrator. At the circuit and port level, performance data is collected. This history can be stored by the network management system for up to 30 days which can be displayed statistically.

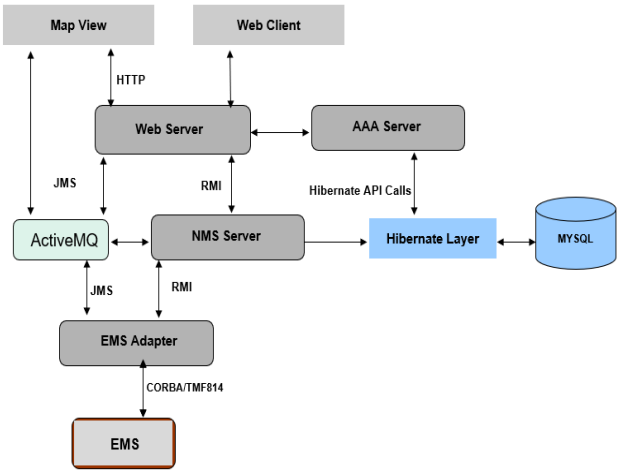

Figure 1: A detailed architecture of the Network Management System

9. Security: Attention has been paid to prevent unauthorized access to the critical and closed segments of the network or be able to alter the services or parameters. Role-Based Authorization Control is used in the system which grants certain privileges and revokes based on the role of the user. Sessions keep track of user activity and log-based technique is used to audit the logs for analysis at a later stage.

High Availability: The system allows 1+1 hot standby configuration for repetition and fault recovery. The information is synchronized for the standby and running network management system in real-time. This facilitates the durability of operations in case of failures or unavailability of the Network Management System at the location where server is running.

IV. ARCHITECTURE

The main server is the Network Management System where most of the business logic for the functioning is written. It executes the business logic when requests come from GUI or the underlying network. It communicates with the Adapter to send/receive the data from southbound using RMI (Remote Method Invocation). It communicates with the ActiveMQ to receive asynchronous notification from southbound and send the same to northbound. The NMS server sends the data recorded as TMF (Telecommunications Framework) object to the EMS adapter. ActiveMQ is responsible for this as both of them are two different applications. ActiveMQ forms the required bridge for the transmission. This adapter is responsible for converting the data to an EA (Enterprise Architect) object. EA objects are proper POJO and are common to all types of EMS. This eliminates the need for NMS to worry about their understanding. CORBA is used for this transmission of data to the EMS.

EMS Adapters are responsible for creating instances in each EMS and also creating sessions with the TMF Server. The EMS receives this on the TMF domain where is processes it for further operations. Java API is needed for data transfer between the different features of the NMS. JMS (Java Messaging Service) is used as a connection binder between the webserver and the NMS server for data transmission. The Web Server, which uses Apache Tomcat, provides the request/response for Web Client (Web GUI) and Applet using HTTP. It communicates with the AAA (Authentication, Authorization and Accounting) Server, for security, and NMS Server, to perform business logic, using RMI protocol. Cache update also happens through JMS object sent by the NMS server. An inhouse web framework is used to provide the view to client. From the webserver to the web client or browser, the system uses RESTFUL API which translates itself as ajax call request. There are two types of GUI/Clients, one is Web Client, which is the browser, and the other is the Map View, which is the Applet. Web Client sends the request to TOMCAT using HTTP and receives response to display it in an array of ways at different places using DHTMLX. Map View is used to display the network topology graphical view along with its location. This also reflects the asynchronous network changes in the topology using JMS.

Since it is launched from Web Client, they are able to communicate with each other. AAA server is used as the security protocol for the reliable transmission of data and secure operations. The data from the NMS is stored in the database in the form of POJO objects. This transfer of data takes place through hibernate framework which makes it easy for the administrators to access and understand the data being stored. Since different applications are being compiled to form one robust network management system, there is conversion of data into different kinds of objects which are application specific at every stage.

V. TECHNICAL SPECIFICATIONS

The proposed Network Management System is a Multi-Vendor as well as a Multi-Domain system. It provides Centralized Topology using WebSwing, Fault Management in the form of alarms and Security Management through only authorized access and complete logs. The system uses a context-based fault monitoring which implements dynamic alarm notification with the highest severity mapping. Network topology has added features of auto-discovery which enhances the ease with which the administrator organizes and manages the networks and circuits.

The Technical Specifications the system in hand can be categorized as the following majorly:

- General: The system supports Multi-Layered Integrated Management of the networks and devices. The Graphical User Interface is easy and intuitive. The system has the ability to organize the network into partitions.
- Configuration Management: There is provision for auto-discovery of node elements. The administrator can manage the VLAN for in-band communication. The administrator can also view physical links and logical connectivity map.
- Provisioning: Support for SDH, MPLS-TP, DWDM and OTN services is provided. The system computes the shortest path for provisioning of optimal paths. Features regarding edit paths, endpoints, protection paths, and bandwidth are added.
- Service Management: The support for point and click provisioning for traffic filtering based on CVLAN, SVLAN, priority, ports/Interface P2P Ethernet service provisioning, and port mirroring configuration has been permitted.
- Performance Monitoring: The system is capable of performance data collection in real-time, and producing reports at 15 min, daily, weekly or monthly intervals.
- Packet Features: The system has provisions for SLA Monitoring, MPLS-TP Tunnels and Pseudowires, end-to-end Ethernet OAM provisioning, and ERPS Ring Configuration. NMS is capable of triggering link-trace and loopback reviews for error isolation and can be authenticated. The administrator can get Ethernet performance data, historical performance data reports.
- Views: The different views provided are Topology View for showing fiber connectivity and virtual topology connections, Partition View for splitting the network into user-defined partitions. There is instant update for faults and alerts displaying connection availability and logical links within and between partitions can be viewed.
- . Security: The network management system levels out users with Role bases Authorisation Control. There is force logout for all users by Administrator and audit logs for all logins, logouts and operational commands. 1+1 Hot Standby configuration of NMS provides data protection in case of network failures.

VI. RESULTS AND DISCUSSION

The proposed system helps us combine the different tasks, of managing nodes(elements) by their addition or removal from the circuits, creation of services over those paths, modification of those services, configuration at the different layers of the system, accessing the reports generated in a system in an easy to use and explain user-interface. The architecture is robust and it able to withstand the different situations arising in the network to provide a reliable working system. Performance reports can be generated for each of the different components, including alarms, maintenance, nodes, services, etc. showing that the system is reliable and running during all times. This makes it easier to rectify the issues arising and enhance the performance further. The system is a solution to the problem of having to manage each of the network components separately. It provides a one-stop network solution which provides the functionality of having all the different views and actions that need to be incorporated in such a system. Furthermore, session-wise access and user-specific modifications makes it a secure platform for everyone. It has access permission-set for all users so that they only access what they are authorized to and not be able to modify the other parts of the system.

VII. CONCLUSION

This paper talks about a Network Management System which functions as a web application. This makes it a stand-alone system with little reliability on the underlying system for requirements. This system is simple, user-friendly, reliable and robust in operation because of the technologies used and give it a higher notch over other existing systems. The features incorporated in the system provide for improvement in security, performance and a single stop application for managing and operating a large array of applications requiring a number of network technologies in a single frame. Web-based technologies provide it an edge over other prevailing systems through enhanced convenience. The different levels make it easier for identifying the problems and making easy passes while solving them. It reduces the burden of the users in understanding and helps them save time in getting the hang of the system.

ACKNOWLEDGEMENT

We express our sincere gratitude to Tejas Networks and Mr. Abhishek Saraswat for granting me this opportunity to carry forward this project and work. We thank all the **teaching staff and technical staff** of the Computer Science and Engineering department, RV College of Engineering for their valuable guidance.

REFERENCES

1. Rafiullah Khan, Sarmad Ullah Khan, Rifaqat Zaheer, and Muhammad Inayatullah Babar, "An Efficient Network Monitoring and Management System", International Journal of Information and Electronics Engineering, 2013
2. Zhang Yongjun, Jiang Dingfu, "Web-Based Network Management System Revolving About Database", International Seminar on Business and Information Management, 2008
3. Du Shiyu, "Web-Based Distributed Network Management System implemented by J2EE Platform", International Conference on Electronics, Communications and Control (ICECC),2011
4. Jae-Won Choi, Kwang-Hui Lee," A Web-based Management System for Network Monitoring", IEEE Workshop on IP Operations and management ,2002
5. Himani Pandey, Himani Rastogi, Charu Gupta, Anuja "Web-based network management system implemented using Hibernate, JBoss and spring framework", 2017 2nd International Conference on Telecommunication and Networks (TEL-NET), 2017
6. Network Management System Web Application, https://www.tejasnetworks.com
7. S. Rabie. Integrated Network Management: Technologies and Implementation Experience. IEEE, infocom'92.
8. Zhang Yongjun, Jiang Dingfu, "Web-Based Network Management System Revolving About Database", International Seminar on Business and Information Management, 2008
9. Shang-Fu, "Study and Design of Integrated Transmission Network Management System Based on CORBA and Web", International Conference on Industrial Control and Electronics Engineering, 2012
10. Mi Xifeng, Fan Yuanyuan, "Network Management System Design and Implementation", IEEE 3rd International Conference on communication software and networks, 2011
11. MiXifeng,FanYuanyuan," Network Management System Design and Implementation", IEEE 3rd International Conference on communication software and networks ,2011
12. Ahmed Kijazi, Michael Kisangiri," Multifunctional network monitoring system using SMS", 2nd PAN African International Conference on Science, Computing and Telecommunications, IEEE,2014
13. C.C.Li, Z.S.Li., F Wang, P Wang, Y Wang, ZC Zhang," The network monitoring system based on Cacti for East, IEEE –NPSS Real Time Conference, 2016
14. Li Xingyua, Jiang Tingting," Design and implementation of the campus network monitoring system", IEEE workshop on Electronics, Computer and Applications,2014
15. Kenji Matsuura, Yosuke Seki, Masahiko Sano, Tetsushi Ueta, "Design and Implementation of Organisational Authorization for a Network Monitoring System", Second international symposium on Computing and Networking, IEEE, 2014

AUTHORS PROFILE

Sheena Garg is a final year student of B.E (Computer Science), from RV College of Engineering, and is currently working as an Intern, R&D in Tejas Networks, Gurgaon. She is a permanent member of Rotaract and has a keen eye for Computer Science and related Technologies.

Currently, working as an assistant professor in the Department of Computer Science, R V College of Engineering, **Dr. Manjunath** completed his Postdoctoral Fellowship (PDF) at the National Institute of Technology (NIT), Tiruchirappalli. Four patents have been filled by him and waiting for examination. Received the Young Scientist award from the Government of Karnataka in the year 2015. Published 15 research papers and 2 book chapters in Springer publication.