International Journal of Innovative Technology and Exploring Engineering (IJITEE)
ISSN: 2278-3075 (Online), Volume-9 Issue-8, June 2020

Advanced Disc Spray Tip Universal Fan Sprayer

Akhmetov Adilbek Agabekovich, Yuldashev Azamat Ismoilovich

Abstract : ***Fan sprayers such as OVH-600 and VP-1 are of indisputable importance in the fight against agricultural pests and diseases, but they have significant disadvantages associated with uneven application of pesticides due to the oscillating movement of their working bodies. To eliminate this drawback, the Agrikhim joint venture developed a universal fan sprayer VP-1IB, which processes field crops, orchards and vineyards based on controlled airborne droplets with simultaneous continuous girth of the entire implement width within ± 900 of the sprayer symmetry axis (in a total of 1800), i.e. around the perimeter of the treatment area. The main working element of the universal fan sprayer is the spraying tips quality performance indicators, which largely depends on the correct choice of parameters of its parts, including the radius of the input channels to the swirl chamber on the swirl disk, to justify the rational value of which this article is aimed.***

Key words: sprayer, spray tips, airborne droplets, radius, chamber, swirls, nozzle, inlet channels, entrance angle.

I. INTRODUCTION.

Pests, diseases and weeds of cultivated plants [11, 15, 25] cause huge damage to agriculture [4, 12], which is expressed in a significant shortage of crops. Given the distinct advantage of toxic chemicals to combat pests and diseases [2, 6], second half 1 century actively use chemical means of protection of agricultural crops [17, 24]. The control of weeds, pests, and diseases of cultivated plants by various types of technical means by the chemical method [9, 18, 23] occupies one of the first places in the general system and technologies of cultivating a particular crop [13, 22]. Even with integrated protection of plants from harmful organisms, chemical protection remains the main [3]. It should be noted that when using pesticides, special attention should be paid to reducing environmental pollution [19]. The correct selection of the type of technical means that introduce a particular form of chemical preparations (pesticides) is of indisputable importance in the fight against agricultural pests and diseases [8, 16].

As is known, the form of the drug and its storage conditions determine how closely the pesticide will come into contact with the pest, as well as with microbes and bacteria that cause diseases [10, 26]. Of the currently available methods of treating plants from diseases or pests, spraying is considered the best [7, 20]. However, available in agricultural production sprayers such as OVH-600 and VP-1 have significant disadvantages [1, 14], associated with uneven application of pesticides oscillating movement of the working bodies of the sprayer, especially at the junction of adjacent passages.

Purpose of research. Increasing the uniformity of application of pesticides by the sprayer, along the entire width of the machine, especially at the junction of adjacent passages.

Materials and methods. To eliminate the disadvantages of existing sprayers with oscillating movements of working bodies, the JV "Agrikhim" has developed a universal fan sprayer VP-1IB [1, 14], which processes crops based on controlled air-drop flows (Fig. 1).

Revised Manuscript Received on June 30, 2020.
***** Correspondence Author
Akhmetov Adilbek Agabekovich*, doctor of technical Sciences, Professor, LLC "Design and technology center of agricultural engineering", Republic of Uzbekistan E-mail: tractor-v@mail.ru.
Yuldashev Azamat Ismoilovich, applicant, Tashkent Institute of irrigation and agricultural mechanization engineers, Republic of Uzbekistan E-mail: azamat3072@mail.ru

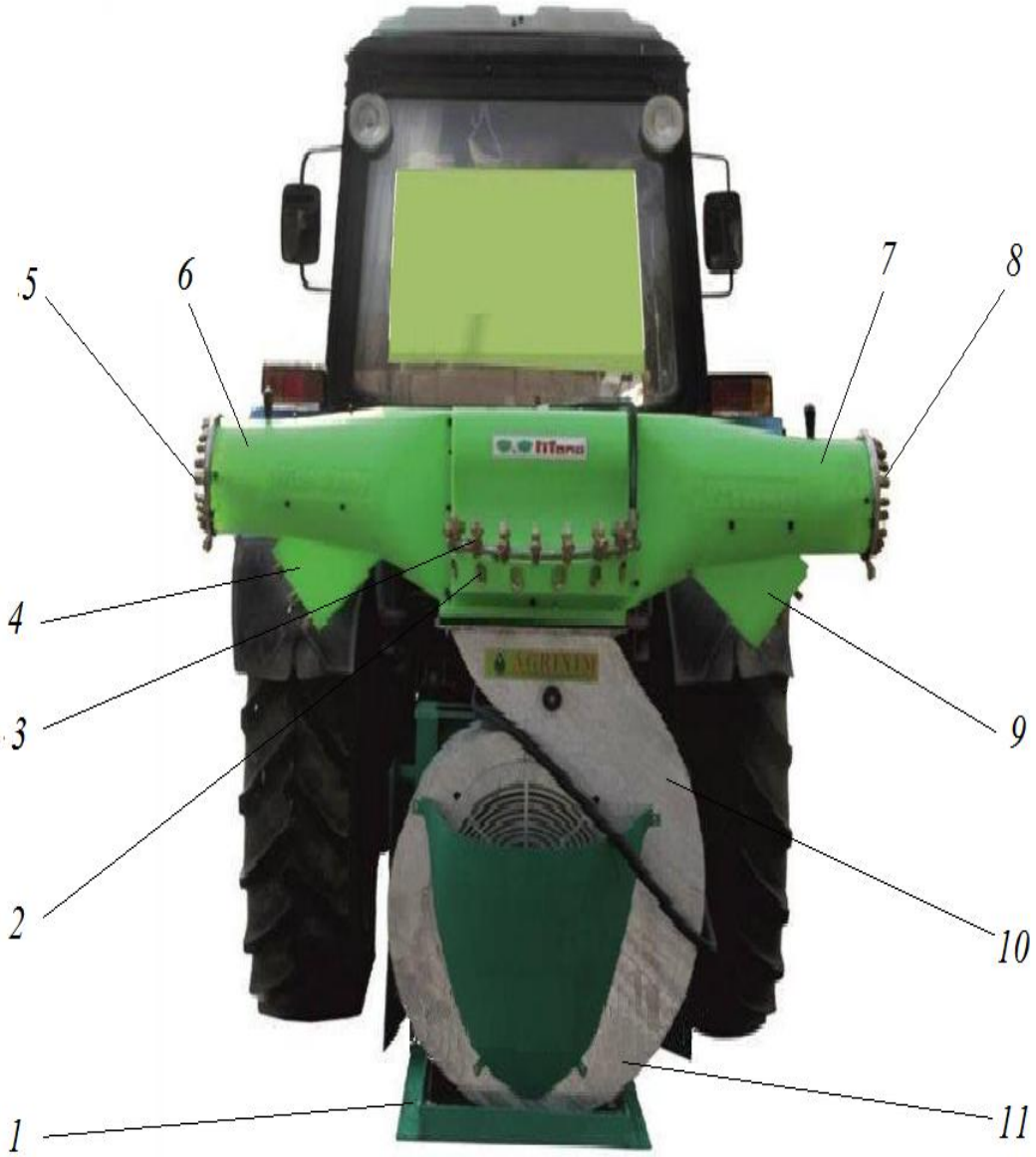

Fig. 1. Universal fan sprayer VP-1IB for processing field and garden crops based on controlled air-drop flows

The main difference between this sprayer is that it processes crops with simultaneous continuous girth across the entire width of the unit within ±900 from the axis of symmetry of the sprayer (a total of 1800), i.e. along the entire perimeter of the processing zone [14].

II. RESULTS AND DISCUSSION.

The universal fan sprayer VP-1IB contains a frame 1, on which the fan 11 with a branch pipe 10 is mounted, the air ducts-left 6 and right 7, oppositely directed and bearing at the ends of the spray tips, respectively, left 5 and right 8. The oppositely directed air ducts are displaced relative to each other in a horizontal plane along the course of the tractor and form a box at the junction, on which the inclined rear tips 3 and the blow tubes 2 are fixed. At the bottom of the opposite direction of the air ducts, there are left 4 and right 9 inclined blowing nozzles, which are also equipped with atomizing tips. The universal fan sprayer is driven by a drive connected to the tractor's power take-off shaft.

The main working element of the universal fan sprayer for processing field crops of orchards and vineyards based on controlled air-drop flows is the spray tips. They must accurately dose pesticides during the operation of the sprayer, maintaining the established flow rate of the working solution or liquid per unit of the treated area with the overlap of the spray torches [5]. Crushing of the working solution injected through the atomizing tips is performed by the tips themselves and partial exposure to the air flow. Transportation of the working solution to the treated surface is performed by means of an air flow created by a fan.

The consumption of the working solution through the spray tip in addition to the diameter of the outlet 1, the nozzle 5 tip, and pressure also affects the total area and the radius of the location at savariaud disk 3 holes 2 input channels 4 into the chamber turbulence (Fig. 2)

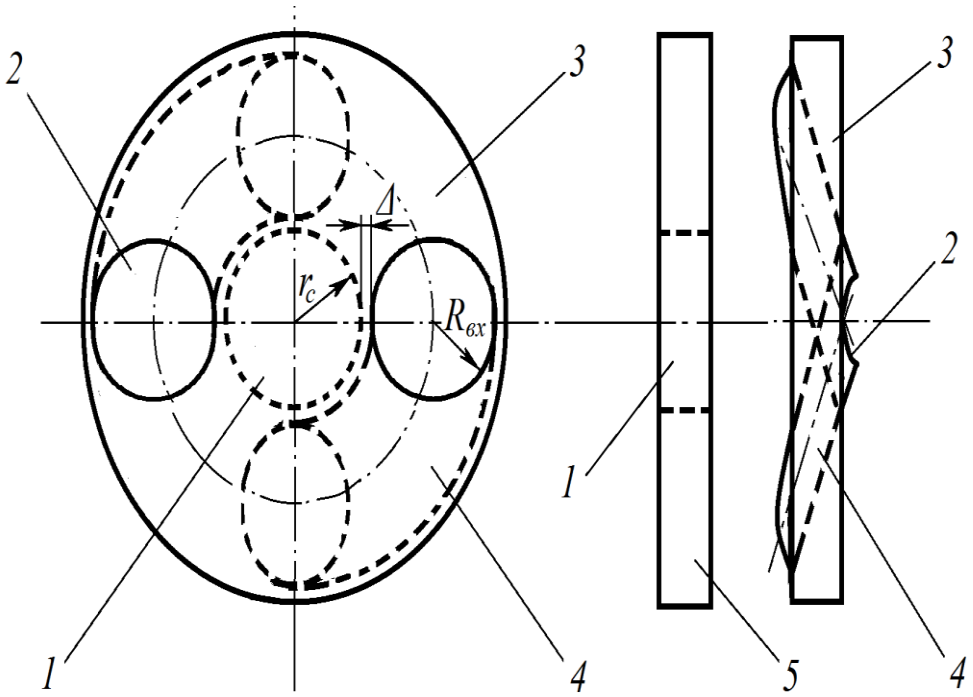

Fig. 2. the Relative position of the nozzle holes and the swirling disk of the spray tip

The radius of the input channels in the swirl chamber depends on the geometric characteristics of the spray tip and according to [21] is determined from the expression

$$A = \frac{\pi R_{вх} r_c \cos\beta}{S_{вх}}, \quad (1)$$

where A – geometric characteristics of the spray tip;

$R_{вх}$ – radius of location on the swirling disk of the input channels to the swirl chamber, mm;

r_c – radius of the nozzle outlet of the spray tip, mm;

β – angle of entry of the working solution into the swirl chamber, degree;

$S_{вх}$ – total area of input channels to the swirl chamber, mm².

In this case, the geometric characteristic of the atomizing tip also depends on the filling coefficient of the swirl chamber with the working solution [21] and is determined by the following expression

$$A = \frac{1-\varepsilon}{\sqrt{\frac{\varepsilon^3}{2}}}, \quad (2)$$

where ε – the filling ratio of the nozzle of the spray tip with the working solution.

By aligning the right sides of expressions (1) and (2) with each other after a simple conversion, we find the radius of the input channels in the swirl chamber

$$R_{вх} = \frac{S_{вх}(1-\varepsilon)}{\pi r_c \sqrt{\frac{\varepsilon^3}{2}} \cos\beta}. \quad (3)$$

In this expression the total area of the input channels to the swirl chamber depends on the number of these channels and the diameter of their holes

$$S_{вх} = n_{вх} \frac{\pi d_{вх}}{4}, \quad (4)$$

then, taking into account (3) and (4), the radius of the input channels in the swirl chamber will be

$$R_{вх} = \frac{n_{вх} d_{вх}(1-\varepsilon)}{r_c \sqrt{8\varepsilon^3} \cos\beta}, \quad (5)$$

where $n_{вх}$ – number of input channels to the swirl chamber;

$d_{вх}$ – diameter of the input channels to the swirl chamber, mm.

From the expression (5), the radius of the location of the input channels to the chamber of turbulence depends on the number and diameter of input channel in the camera swirls, the radius of the outlet nozzle of the spray tip, the fill factor of the camera swirls the spray tip working solution and the inlet angle of the working solution into the chamber turbulence. On a universal fan sprayer for processing field and garden crops based on controlled air-drop flows, spraying tips are used, the nozzle of which is made of plastic with a single hole with a diameter of 1.5 mm,

and a swirling disk made of metal with the number of input channels equal to 2 with a hole diameter of 1.5 mm. The dependence RVC = f (ε,β) constructed for these parameters of the spray tip is shown in Fig.3.

To achieve a swirl of the working solution, the radius of the inlet channels to the swirl chamber must be selected so that the nozzle of the spray tip does not coincide in any way with the opening of the inlet channels to the swirl chamber (see Fig. 2). To do this, there must be a distance Δ Between them, therefore, for our case, it must be RVC > 1.5 mm. In this case, the swirl chamber must be filled with a working solution of at least 1/3 and no more than 2/3 of the part, i.e. ε = 0.33 - 0.66.

In addition, the angle of entry of the working solution into the swirl chamber for the vast majority of atomizing tips is within the range of 23 – 450 [21].

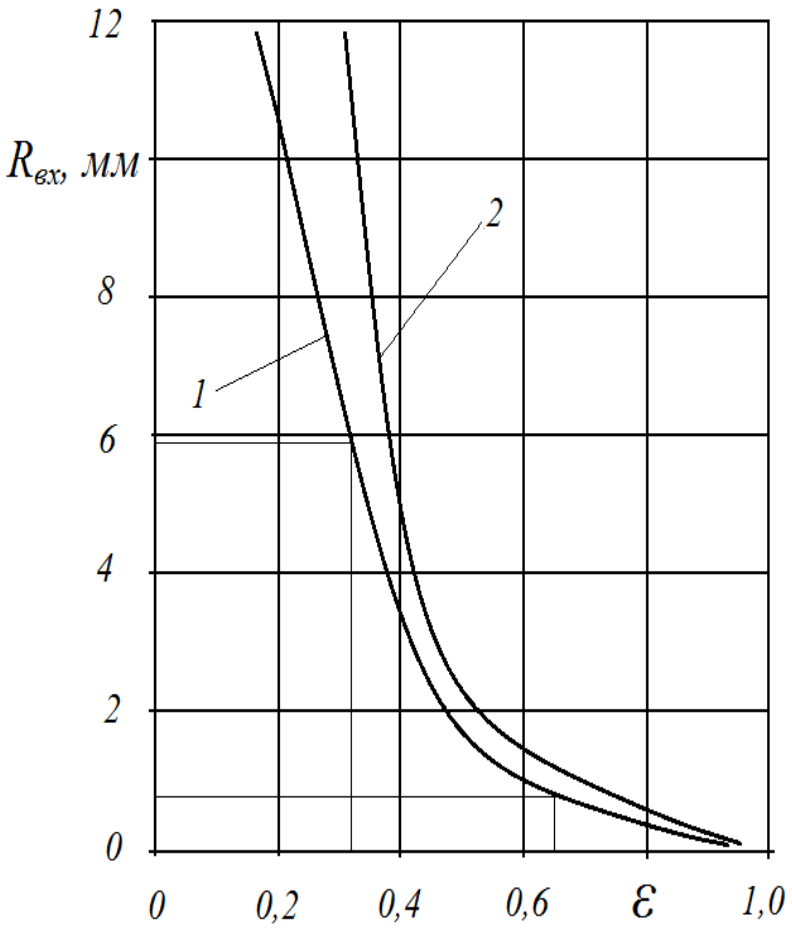

Fig. 3. Dependence of the radius of the input channels in the swirl chamber on the filling coefficient of the tip nozzle with the working solution at:
1 - β = 23^0; *2 - β* = 45^0

The graph shows that at ε = 0.33 - 0.66 and β = 230, the radius of the input channels into the swirl chamber is on average Rin = 3.5 mm, which is more than 1.5 mm.

The parameters determined in the course of the research were incorporated into the design of the spray tip installed on the universal fan sprayer VP-1IB for processing field crops, orchards and vineyards, and it was tested in the work (Fig. 4). During testing, the universal fan sprayer VP-1IB was compared with the serial sprayer in VP-1 with oscillating movement of the working organs.

The results of the work have shown the possibility of aggregating the universal fan sprayer VP-1IB with the universal tilled tractors available in the Republic. In this case, the universal fan sprayer is mounted on the tractor without any remarks, and there is no dangerous convergence of the tractor elements and the universal fan sprayer. The operation of the universal fan sprayer and its transfer from the transport to the working position or Vice versa occurs in normal mode, without comments. Compared with the serial sprayer in the VP-1, the developed VP-1IB differs in the absence of oscillatory movements of working bodies and a number of kinematic pairs and drives. At the same time, the swirling tip of the spray tip installed on the VP-1IB universal fan sprayer with the radius of the input channels into the swirl chamber Rin = 3.5 mm ensures uniform distribution of the working solution over the girth of the spray plume and, thereby, produce high-quality processing of field crops. It should be noted that the exclusion of oscillating movements of working bodies and the absence of a number of kinematic pairs and drives in the universal fan sprayer VP-1IB allows you to significantly simplify and reduce the cost of construction, and the absence of rubbing and moving parts and components increases the reliability of the design.

Fig. 1. Universal fan sprayer VP-1IB during field testing

III. CONCLUSIONS

The exclusion of oscillating movements of the working bodies of the sprayer, a significant width of the grip allows you to dramatically increase the productivity of work, as well as minimize changeovers.

The absence of a number of kinematic pairs and drives makes it possible to significantly simplify and reduce the cost of the sprayer design. There are practically no rubbing and moving parts and assemblies, which increases the reliability of the design.

The rational value of the radius of the location of the input channels into the swirl chamber providing high-quality processing of field crops, orchards and vineyards with a universal fan sprayer VP-1IB is Rin = 3.5 mm.

LIST OF REFERENCES

1. Akhmetov A.A., Yuldashev A.I., Kambarova D.U. Justification of the number of nozzles of a universal fan sprayer // Agricultural machines and technologies. 2020.V. 14. No. 1. P. 76-80.
2. Volovik A.S., Glez V.M., Zamotaev A.I. et al. Protecting Potatoes from Diseases, Pests, and Weeds: A Handbook. - M .: Agropromizdat. 1989.205 p.
3. Bazdyrev G.I., Tretyakov N.N., Beloshapkina O.O. Integrated plant protection against pests. M .: "INFRA-M", 2014. 302 p.
4. Grisso R.B., Dickey E.C., Schulze L.D. The cost of misapplication of herbicides. – Applied Engineering in Agriculture, 1989; 5(3): pp. 344-347.
5. Derksen R.C. Hydraulic nozzles for boom sprayers. NRAES. 1994. 6 p.
6. Drincha V.M. and I. Rufai. Prospective areas in Agricultural Engineering Research for Sustainable Agriculture and Rual development. M.: VIM, 2005. 168 p.
7. Jobnson M.P., Swetnam L.D. Sprayer nozzles: selection and calibration. University of Kentucky. Pat 3. 2000. p 6.
8. Zinchenko V.A. Chemical protection of plants: tools, technology and environmental safety. M .: Kolos. 2012.24 p.
9. Klenin N.I., Sakun V.A. Agricultural and reclamation machines. M .: Kolos. 1980.671 p.
10. Korolev P.A. Safety measures during transportation and storage of plant protection chemicals. M .: Kolos, 1966.64 p.
11. Korchagin V.N. Plant protection against pests and diseases in the garden plot: a Handbook. Moscow: Agropromizdat, 1987.317 p.
12. Kostyuk A.V., Lukacheva N.G. The effectiveness of the use of herbicides in corn // Agriculture. 2015. No. 4. P. 30-32.
13. Koshelyaev I.P. Plant protection. Protection of essential oil and medicinal plants from pests and diseases. Penza, 2014.150 p.
14. Matchanov R., Yuldashev A., Voinov S., Sherimova G. Experimental studies of a double-nozzle fan sprayer. // The world of agrotechnics. Tashkent, 2018. No. 6. .26-28p.
15. Matchanov R.D. Plant protection in the culture-pest-drug-machine system. Tashkent: Fan. 2016.360 p.
16. Nikitin N.V., Spiridonov Yu.Ya., Shestakov V.G. Scientific and practical aspects of the technology of using modern herbicides in crop production. M .: RAAS. VNIIF. 2010.189 p.
17. Popov S. Ya., Dorozhkina L.A., Kalinin V.A. Fundamentals of chemical plant protection. M .: Art-Lyon. 2003.208 p.
18. Pearson S.L., T. Reed and B. Gobel. New Developments in Spray Tips to Reduce Drift. ASAE Paper № 931081. 1996. 15 p.
19. Rufai I., Drincha V. Ecological aspects of agricultural mechanization. Published by ABU Press Ltd, 2009. pp. 262.
20. Sadduth K.A., Borgelt S.C., Hou J. Performance of chemical injection sprayer system. Transactions of the ASAE. 1995. Vol. 11(3): pp. 343-348.
21. Handbook of agricultural machinery designer. - Moscow: Mashgiz, 1961. Vol. 2. 862 p.
22. Toloraya T. R., Laskin R. V., Patskan V. Yu. Influence of pre-sown tillage systems on corn yield under different methods of main processing and herbicide application / / Agriculture. 2018. no. 1. Pp. 23-26.
23. Turbin B. G., Lurie A. B., Grigoriev S. M., Ivanovich E. M., Melnikov S. V. Agricultural machines. Theory and technological calculation. Leningrad: Mashinostroenie, 1967, 583 p.
24. Sharkov I. N., Zakharov G. M., Krupskaya T. N. Efficiency of application of chemicals for spring wheat in the forest-steppe of Western Siberia / / Agriculture. 2017. no. 6. Pp. 16-18.
25. Shtundyuk A.V. Protection of plants from pests and diseases (on the infield). Novosibirsk: Novosibirsk book publishing house, 1986. 160 p.
26. Cherkashin V. N., Malykhin V. A., Krivonosova O. N. Protection of field crops from pests, diseases and weeds / / Agriculture, 2012, No. 3. Pp. 28-30.

AUTHORS PROFILE

Akhmetov Adilbek Agabekovich Doctor of Technical Sciences, Professor of Design and Technology Center for Agricultural Machinary, LLC, of the Republic of Uzbekistan

Yuldashev Azamat Ismoilovich applicant, Tashkent Institute of irrigation and agricultural mechanization engineers, Republic of Uzbekistan