International Journal of Innovative Technology and Exploring Engineering (IJITEE)
ISSN: 2278-3075 (Online), Volume-1 Issue-3, August 2012

Video Monitoring System Based on ARM9

Srikanth V, Leelavathi G

Abstract*: The preceding and existing video surveillance system which entails high end cameras, video servers, network switch and monitoring PC all these resources leads to complexity, expensive, high power consumption and also requires more area to establish. In order to overcome the hitch in the preceding and existing system, this paper presents a proficient where it uses few hardware resources for the implementation of the video monitoring system. S3C2440 is a very good ARM9 family processor providing a camera interface which is very conducive to the application and development. Embedded Linux is chosen as operating system which provides open-source, multi-task, multi-process, highly modular, multi-platform support, performance and stability to the system. The design system achieves maximum frame rate of 30fps with a resolution of 1280x1024 if individual camera is initialized and 10fps with a maximum video resolution of 340x480 if two cameras are initialized. The application of this paper can be implemented at security surveillance, patient monitoring in hospitals and polling booths.

***Keywords:* ARM9, MINI 2440, MJPG-streamer, JPG, IP address,**

I. INTRODUCTION

This paper consists of an integrated system with strong guard ability. Depending on its intuitive, convenient, rich information the video monitoring system widely applied in many kinds of situations. In recent years, with the rapid development of computer, network and the imagery processing, lots of embedded video monitoring system emerged. It is one kind of embedded system which can gather image and process rapidly. According to the characteristic of the system, such as small size, low power consumption, quick speed and so on, it is an embedded image acquisition system with strong versatility. The paper presents the efficient way of using the resources available in the mini 2440 development board such as the application specific S3C2440 microcontroller 2 port USB interface support for interfacing web cameras, and embedded camera interface support for interfacing CMOS camera. The development board can be connected to the internet, the efficient programming which is done using programming language C all these resources makes the paper presents an competent video monitoring system.

Revised Manuscript Received on 30 August 2012
*****Correspondence Author(s)
Srikanth V*, VLSI Design and Embedded Systems, Visveswaraiah Technological University/ UTL Tech Ltd, VTU Extn Centrre/ Bangalore, INDIA,9986148340.
Prof. Leelavathi G,VLSI Design and Embedded Systems, Visveswaraiah Technological University/ UTL Tech Ltd, VTU Extn Centrre/ Bangalore, INDIA,9845365189.

II. HARDWARE SYSTEM

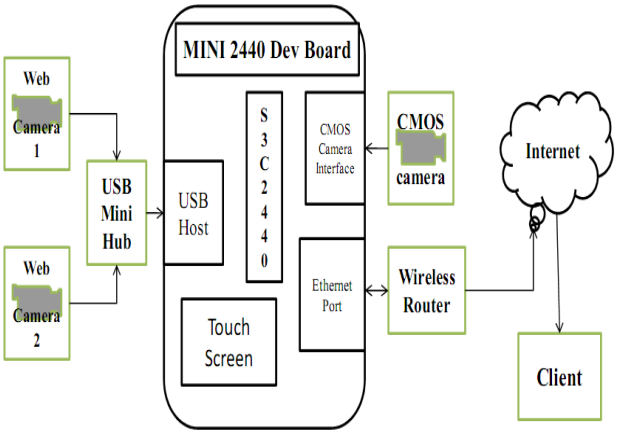

A. Mini 2400

The MINI2440 Development Board is based on the Samsung S3C2440 microprocessor. Its PCB is 4- layer boarded, equipped with professional equal length wiring which ensures signal integrity.MINI2440 boards are manufactured in mass production and released with strict quality control. On startup it directly boots preinstalled Linux by default. There are no extra setup steps or configuring procedures to start the system. It is easy for users to get started. Anyone with very basic knowledge about the C language can become proficient. FriendlyARM. Mini 2440 with 400 MHz Samsung S3C2440 ARM9 processor. [3]The board measures 100 x 100 mm, ideal for learning about ARM9 systems. On board 64M SDRAM and NAND Flash,2M NOR flash with preinstalled BIOS, 100M Ethernet RJ-45 port (powered by the DM9000 network chip), The MINI2440 development board currently supports Linux 2.6.29 and WinCE.NET 5.0.Final Stage

B. S3C2440

SAMSUNG S3C2440 uses 16/32 bit ARM920T RISC technology for the core. Its main Frequency is 400M Hz. It provides a camera interface (camif) to support camera. There are two models for camif to transmit data with DMA controller: one is called Preview mode, which transform the image data sampling from the camera interface into the RGB format, and transfer it to the SDRAM under control of the DMA; the other is called code mode, which transmits the image data to the SDRAM in YCbCr4:2:0 or 4:2:2 format.[5]

C. OV9650

OV9650 produced by OmniVision is a low-voltage single-chip CMOS color image sensor, with 1.3 million pixels, maximum frame rate in VGA format is 30 fps, while 15 fps in the SXVGA format, and through the SCCB interface to set internal registers. [6]

Published By:
Blue Eyes Intelligence Engineering and Sciences Publication (BEIESP)

Camif connects with OV9650 through the eight data pins (CAMDATA0~CAMDATA7), camera synchronous signal CAM_VSYNC and camera reset signal.S3C2440 has no SCCB interface, so using the S3C2440 universal I / O port to simulation. Use GPE14 to simulate SIO_C, GPE15 to simulate SIO_D, programming to achieve SCCB protocol communication.

D. Logitech Webcam C110

The C110 has a USB 2.0 Connection type support, optical resolution is true 640x480 , Interpolated 1.3MP with maximum frame rate of 30 fps @640 x 480.

E. Logitech WebcamC300

The C300 has a USB 2.0 Connection type support, optical resolution is true 1280 x 1024, Interpolated 1.3MP with maximum frame rate of 30 fps @640 x 480.

III. SYSTEM SOFTWARE DESIGN

The software design of the system consists of two modules, here to initialize the Web Cameras and CMOS camera. MJPG- streamer is used to capture the video frames and transmit to the output plug-in. The MJPG-streamer is designed by C language. The stream viewer is built by JAVA language, the client-side code for use in a web page, or from the command line.

A. Implementation of USB Video Capture Driver

Video4Linux (V4L) is video equipment's kernel driver which is under embedded Linux. It provides a series of interface functions for the programming application of video equipment under Linux [1]. The driver of USB interface camera needs to provide the realizations of basic I/O operational functions, interrupting handling, memory mapping function and ioctl functions of I/O channels, control interface, and define them in the struct file operations. Thus when the application program carry on system calls such as open and close operations, the Linux kernel will visit the function which is provided by the driver through the struct file operation.

B. MJPG-streamer design

Figure 2. is the flow chart for MJPG-streamer, initially it checks for the parameter parsing, in the command line the object files of MJPG-streamer is executed by using vi editor commands of Linux environment.

C. Design of the MJPG-streamer

The flow chart in figure 2 briefly explains about the design of MJPG-streamer, The design of MJPG-streamer is done by Programming language 'C', the main modules of the MJPG-streamer are as follows:

1. Headers files which include standard headers and functional headers required for the streamer.
2. Help function is used to display log messages when error occurs.
3. Signal handler function, it is defined for the signal to stop and clean up the threads.
4. The main function starts by parameter parsing, it defines options index with it.
5. Daemon mode will be initialized, the program that runs as a background process.
6. SIGPIE is ignored during the synchronization with the global picture buffer.
7. Next will be opening of output plugin and input plugin

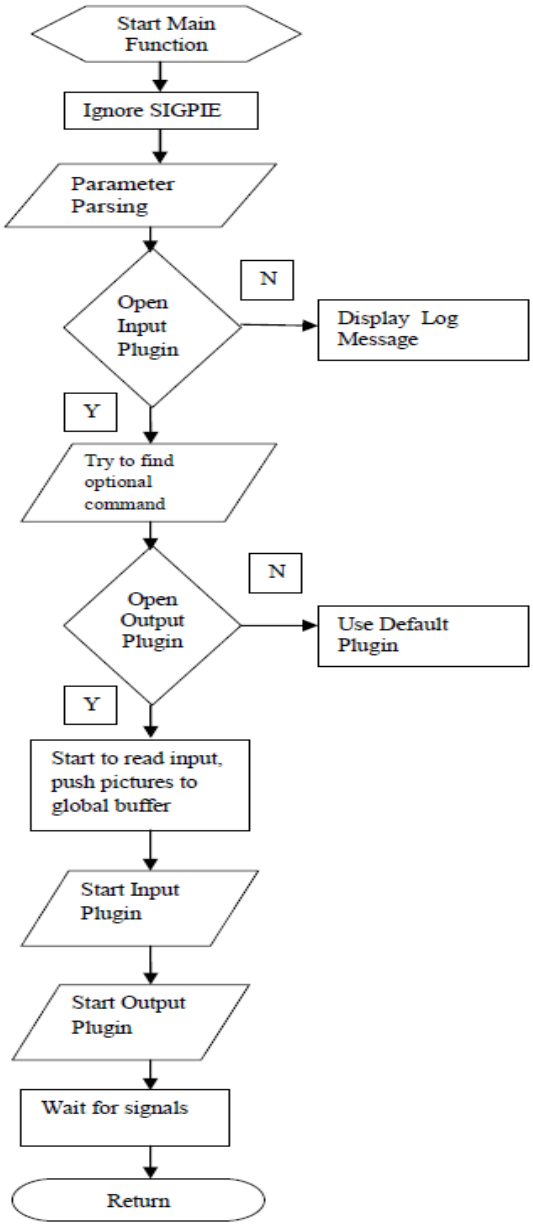

Figure 2. Flow chart of MJPG- Streamer Design

D. Stream Applet Viewer

The stream applet viewer for multipart jpeg streams that are often pumped out by a streaming webcam server, sending over multiple images per second. Netscape will display and refresh these automatically, but Internet Explorer and other browsers do not - they will only display the first image.

Supports pluggable 'accessories' that may be used to display information about the stream or change its appearance.

E. Design of the Stream Applet Viewer.

The Flowchart in the figure 3 shows the design of the stream applet viewer. The design procedure is as follows.

1. Start with input arguments.
2. Ensure the argument is valid, if valid process input parameters and initialize input variables, if not valid display help log.

Published By:
Blue Eyes Intelligence Engineering
and Sciences Publication (BEIESP)

3. Check for option parameter, if missing set default, else create new frame, set application message and parse videostream URL.
4. If URL is valid read video data, start the applet and display video. Else connection refused.

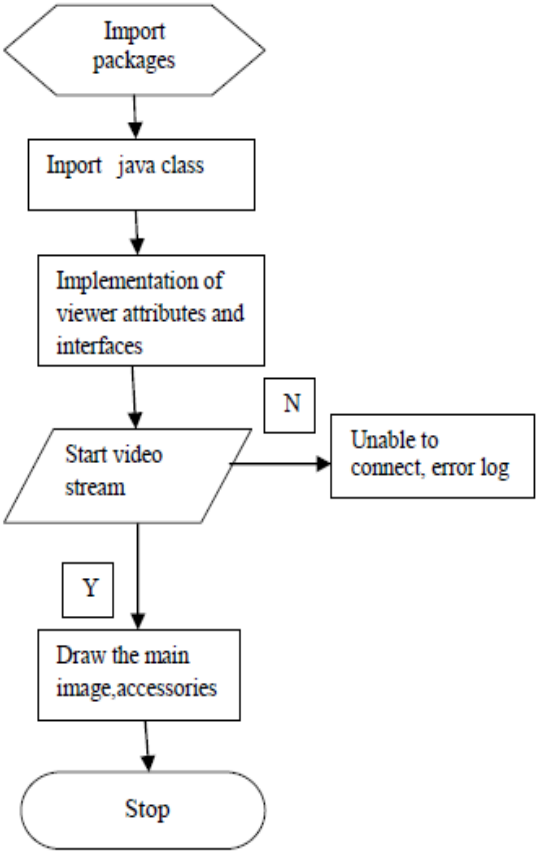

Figure 3. Flow chart of stream viewer applet

D. HTML design for video streaming

The HTML page is designed by the procedure showed in the flowchart in figure 4. The centre module of the HTML page contains the 'iframe' source, which gives the link to the IP address, HTML page and exclusive HTTP port for streaming the video from respective web camera.

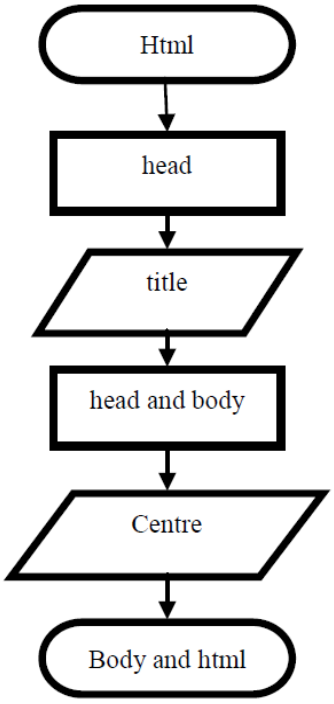

Figure 4. Flow chart of HTML page design.

III. RESULTS

A. MJPG-Streamer execution

Figure 4, The three windows displays the streamer, started for two web cameras and CMOS camera.

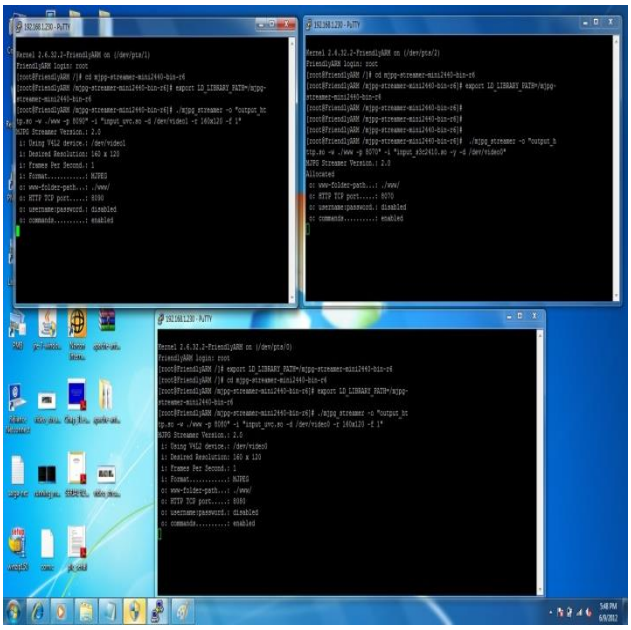

Figure 4. Screen print of MJPG-Streamer

B .Video Streaming in the webpage at the client side

Figure 5, The three windows displays the live video streaming of two web cameras and CMOS camera

Published By:
Blue Eyes Intelligence Engineering
and Sciences Publication (BEIESP)

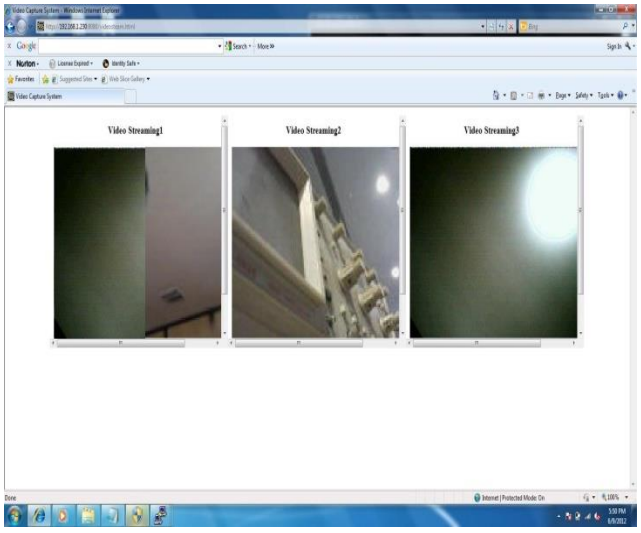

Figure 5. Live video streaming

IV. CONCLUSION

The result reveals that, compared to existing video surveillance system, it employs fewer resources, stable performance, occupies less area, consumes less power and economical. The maximum video frame rate can be achieved at 30fps and a maximum video resolution of 1280x1024 if individual web camera and CMOS camera is initialized and maximum video frame rate of 10fps at 340x480 video resolution can be attain when single web camera and CMOS camera is initialized.

ACKNOWLEDGMENT

I acknowledge Dr. V.Venkateswarlu, Principal, UTL Technologies for his guidance and suggestion

REFERENCES

1. Min Zhang, Jin-guang Sun and Shi Wang,"Research and Implementation of the CMOS Camera Device Driver Based on S3C2440", Intelligent Computation Technology and Automation (ICICTA), 2010 IEEE International Conference, Vol-2, 1039 – 1042, 11-12, May 2010.
2. Denan Li, Zhiyun Xiao," Design of embedded video capture system based on ARM9", Electric Information and Control Engineering (ICEICE), 2011 IEEE International Conference, 2092 – 2095, 15-17, April 2011.
3. Yi-Shin Tung , Ja-Ling Wu and Ho Chia-Chiang " Architecture Design of an MPEG-4 System", Consumer Electronics, 2000. ICCE. 2000 Digest of Technical Papers. IEEE International Conference, 122 – 123, 2000.
4. Guerri, J.C.,Pajares, A.,Esteve, M,Palau, C and Leon, A," A feedback packet-level error control for real-time applications in wireless networks" , Vehicular Technology Conference, 1999. VTC 1999 - Fall. IEEE VTS 50th , Vol 2,879 – 883, 1999.
5. Jianyu Dong; Chao He; Zheng, Y.F," AVP: a highly efficient real-time protocol for multimedia communications on Internet ",Information Technology: Coding and Computing, 2001. Proceedings. IEEE International Conference, 280 – 284, 2001.
6. Parthasarathy, V.; Bharathi, A.V.; Rhymend Uthariaraj, V," Performance_analysis_of_embedded_media_applications_in_newer_ARM architectures ",Parallel Processing, 2005. ICPP 2005 Workshops.IEEE International Conference Workshops, 210 – 214, 2005.
7. Hyung Su Lee; Hee Young Youn; Hye Dong Jung," Packet_control mechanism_for_seamless_multimedia_streaming_service_in_wireless network ",Advanced Communication Technology, 2006. ICACT 2006. The 8th International Conference , Vol 3, 6 pp. – 1838, 20-22 Feb. 2006.
8. Lihong Xu, Shuhua Ai," A New Feedback Control Strategy of Video Transmission Based on RTP", Industrial Electronics and Applications, 2006 1ST IEEE Conference, pp. 1 – 4, 24-26 May 2006.

Published By:
Blue Eyes Intelligence Engineering and Sciences Publication (BEIESP)