International Journal of Innovative Technology and Exploring Engineering (IJITEE)
ISSN: 2278-3075 (Online), Volume-8 Issue-11, September 2019

Validating Simulation Result of Solar Hybrid System for Domestic Consumers using HOMER Software

Balaram Das, GRKD Satya Prasad, Ch. Saibabu, Swarna Prabha Sadangi

Abstract*: Consumption of fossil fuel and its effect on the environment has become a major universal problem. It is therefore necessary to use renewable energy resources (RES) such as solar, wind, etc. to decrease dependency on conventional energy resources. Currently, solar rooftop PV hybrid energy systems are becoming popular to overcome with the disadvantages of conventional energy sources. This paper presents a simulation-based strategy with the help of HOMER software to control the optimum utilization of renewable hybrid energy system for private buildings where it helps to maximize the building's renewable power ratio and minimizing complete net current costs and CO2 emissions so that it's a viable solution to address to the power shortage and Greenhouse gas emissions. Finally, manual calculations measured with net-meter are being validated with HOMER software and the results are more accurate with a variation of 1%.

Keywords: Combined PV, Clearness index, Solar PV, Zero Energy Buildings.

I. INTRODUCTION

A typical hybrid renewable energy system is the combination of minimum two or more than two energy sources. It is used to provide the pollution free and less cost energy and increase the system efficiency. It is popular due to it fulfill the energy requirement of rural people where regular power supply was not provided. In cities, renewable energy schemes was given preference for business or residential buildings. [1]. This article provides a comprehensive research on a economic implementation of the hybrid renewable energy system consists of PV - wind battery structure for a household load of residential building [2][6]. This will generate more output power from wind during the winter and from solar panels during the summer [4]. This hybrid system helps in increasing the efficiency and decreases the environment effect [5][6]. The suggested renewable design Solar PV system is designed to power one room with multiple loads. The simulation findings validated that the hybrid system's main load requirement of 2.760 kW hr per day composed PV system of 1.5 kW, wind turbine of 400W, inverter of 600 W, and five batteries of 200Ah [10]. Further this system can be integrated to Zero Energy buildings (ZEB) also, so that this data is a future reference to such type of projects. The concept of ZEBs is the amount of energy used in the building is coming from only renewable energy sources.

Manuscript published on 30 September 2019.
*****Correspondence Author(s)
Balaram Das, EE Department, GIET University, Gunupur, India.
G R K D Satya Prasad, Department of EEE, GIET University, Gunupur, India. Research Scholar, JNTU, Kakinada
Sai Babu. Ch. Professor in EEE Department, JNTUK, Kakinada, India

II. HYBRID SYSTEM

In fields where solar and wind trends are explicitly high, a renewable hybrid energy system composed of wind and solar becomes cost effective; otherwise they are too expensive [15]. A renewable hybrid energy system made up of wind and solar becomes cost effective in areas where solar and wind patterns are explicitly high; otherwise they are too expensive [3]. The effectiveness of getting-and-going of these sources also comes first. So before installing a hybrid system to meet our electricity requirements at home, we need to built high performance windows and lighting to minimize consumption of electrical energy [3][14]. Only then it can create sense to have a wind-solar amalgam system. Otherwise, a very big and costly arrangement will be needed [14]. The advantage of this type of system is that it can reach easily to any remote place and fulfill the basic needs of rural life where grid supply has not been reached. Energy generated by both solar and wind gears is stored for use whenever needed in a battery bank. A hybrid renewable energy system uses moren than one sources of generating energy, usually wind and solar [14]. The key result of solar - wind hybrid arrangement is that it improves the reliability of the system when wind and solar power generation are arranged. The size of battery arrangement can also be moderately decreased. During the time when there is no sun, the wind is abundant [3][14].

Usually during the periods where the sun resources are more, wind speeds are constantly small. On the other end, the wind is stronger in seasons when there are fewer sun resources around. [4][5]. Unfluctuating on the same day, there are distinct patterns in airstream and solar contacts in many areas globally or in particular phases of the year [5]. A hybrid solar-wind energy system requires an compound investment than a single bigger scheme; large solar photovoltaic and wind systems are comparatively lower in cost than smaller hybrid systems [14]. But the hybrid renewable source is an outstanding choice when paramount progress is made in production and routine interactions that materialize when the solar and wind energy resources have opposite cycles and intensities on the same day or in certain seasons. [5].

Integrating power, overall efficiency can be improved by efficient devices and maintain energy for a hybrid system compared to separate tools [6]. With redundant techniques and get-up-and-go storage, achieving advanced reliability can be skilled. Some hybrid energy system includes both, which can boost the quality and willingness of energy in the chorus.

Table 1: Loads of consumer

Components	Rating	Quantity	Running hrs	Total energy consumption
Tube light	40 W	1	10	400W
Incandescent lamp	60W	1	5	300W
Fan	80W	1	17	1360W
TV	100W	1	8	800W
Laptop	60W	1	3	180W
			Total	3040W=3.04 kW

III. IMPLEMENTATION OF PROJECT

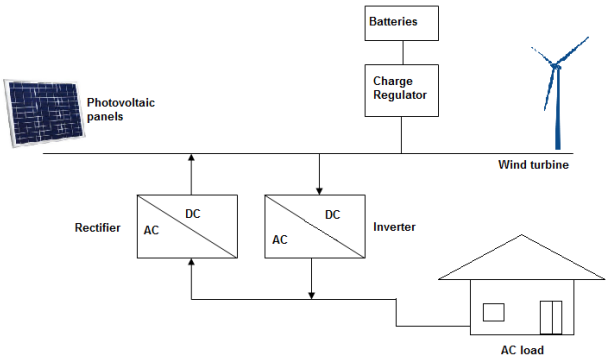

Fig 1: Layout of project work

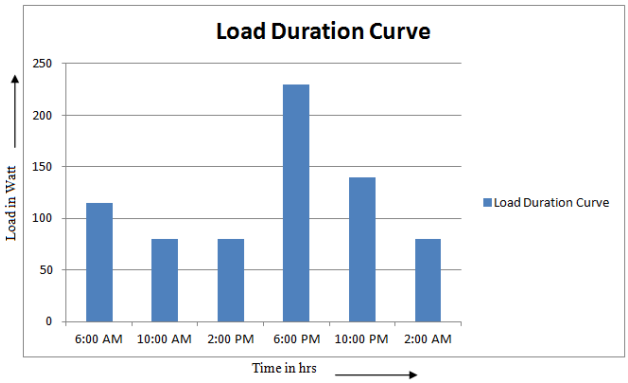

Fig.2: Load duration graph

Implementation of Project :

The project has been planned as per the local authority guidelines and Solar energy policy. But, before going for purchasing of the equipment, financial validation is required to invet in this type of projects.

Hence, the entire process has been simulated by using Simulation approach by integrating all real constraints of the project including local weather conditions.

Fig. 2: connection of Solar PV panels to building

IV. ANALYSIS

In fig.2 the load duration graph is shown and the loads used in our project are for a small residential building consisting of a tube light, an incandescent lamp, a fan, a TV and a Laptop. The total running hours of different loads are 24hrs [14][12][9]. The maximum load is 230 watt for 4 hours and the minimum load is 80 watt for 12 hours. So, based on the data given in Fig.2, an Inverter of 600 watt output can be installed for safe operation. Equation(1) can be used to find the input current given to the inverter.

$$I_{IN} = \frac{WATT_{OUT}}{V_{IN} \times EFFICIENCY} \ldots\ldots\ldots (1)$$

$$WATT_{OUT} - \text{Output of inverter}$$

$$V_{IN} - \text{Voltage input to inverter i. e. 12V}$$

$$EFFICIENCY - 87\% \text{ of inverter}$$

$$I_{IN} = \frac{600}{12 \times 0.87} = 57.47 \text{ Amp} \ldots\ldots\ldots (2)$$

Next step is to determine the battery capacity which is equal to I_{IN} * total running hours = 57.47 amp * 24 hrs = 1379.28 AH.

The battery storage capacity can be decided by AH rating, and it can be calculated based on the autonomy of power which the house requires. Hence, in this case depending on the load current and number of hours usage will decide the capacity of the battery. [7]

V. LOCATION AND GEOGRAPHICAL FACTORS

While selecting the wind turbine, the location, place, and other geographical factors are very important.

Project financial constraints will depend on may factors like project location, type of panels, Fill factor of panels, tilt angle of panels, maintenance features of panels, Inverter technology, MPPT features, quality of the DC cables etc.,

The scope of this research paper is limited to the assessment of Solar PV power with grid integration, hence the above all selection criteria features are predefined as per the HOMER software constraints.

Solar Radiation

The solar radiation in buildings site is reaching 5.4 kwh/m^2 in summer season and in winter and rainy season it is around 3.2 kwh/m^2. The annual average of solar radiation is estimated to be around 4.4 kwh/Sq.m. By analyzing diffusion and sky clearness index the percentage of solar radiation further reduces to around 10%.

Below Fig. shows the clearness and daily radiation of PV array for different month of a year[16]. This one is found by taking the latitude which is 18.9 and longitude of 89.0 of Gunupur town. Based on this the Clearness and daily radiation is found from January to December. It was found that Clearness is highest in the month of February with Daily radiation of 5.494 kWh/m2/d But daily radiation is more in the month of April with clearness of 0.591 index.

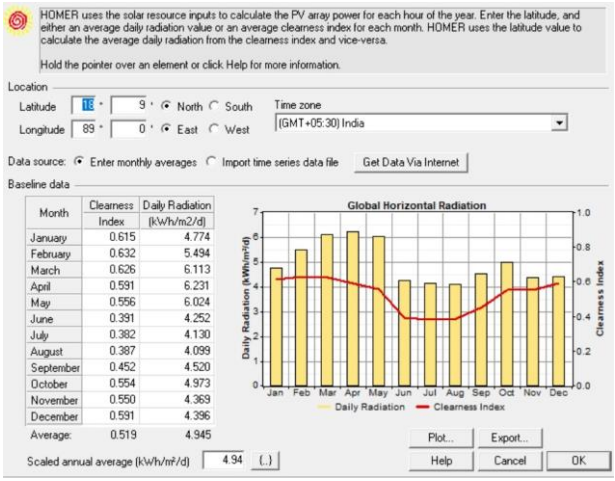

In this project, the hybrid energy system with grid becomes more popular with more system connections [8]. It acts in the near future as master plans for fossil fuel spare [8]. There are disadvantages with the benefits of any scheme, so these faults are enhanced through the beginning years and the effectiveness of the renewable hybrid energy system met with the desired values.

More the current operating techniques develop, the more advantages we will gain in the future [7][8][9]. electronics and gearboxes, cause changes in the field of wind turbines [7].

VI. RESULT AND DISCUSSION

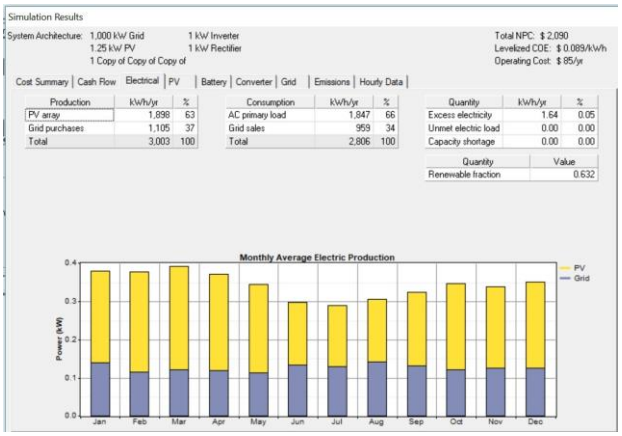

Above figure, concludes that the simulation result of average by monthly wise electric production of a hybrid system. The system is connected to 1000 kW Grid and 1.25 kW Photo Voltaic system. Apart from that 1kW Inverter and 1kW of rectifier is also connected in the system. It shows how much fraction of total energy used from renewable energy used. It is found that out of total energy production, PV array produce 1898 units which is 63% of total energy produced, and from grid energy of 1105 units purchased which is 37% of total units produced. Out of total energy 1847 kWh/yr is consumed by AC primary load which is 66% of total energy and 956 kWh/yr of energy sold to grid which is 34% of total energy.

Month	Units Purchased (kWh)	Units sold (kWh)	Total Purchases (kW)	Max. demand (kW)	MD Charge ($)
January	104	104	0	1	5
February	77	99	-22	0	3
March	90	109	-19	0	4
April	85	97	-12	1	4
May	84	87	-3	1	4
June	95	48	48	1	7
July	97	48	48	0	7
August	105	50	55	0	8
September	95	65	30	0	6
October	90	85	4	0	5
November	90	79	10	1	5
December	93	87	6	1	5
Annual	1105	959	146	1	63

Table shows the amount of energy purchased and sold in each month of a year. It is found that in the month of August highest energy purchased i.e. 105 kWh and in the month of February lowest energy purchased which is 77 kWh. Highest energy sold in the month of March i.e 109 kWh where net purchase is -19 kWh and lowest energy sold in the month of June and July where net purchase is +48 kWh. So total energy purchased is 1105 kWh and total energy sold is 959 kWh with net purchase of 146 kWh.

Similarly, with the option of Net metering, the number of units generated in system either exporting or importing will give a option to the consumer about the idea of battery usage. A net metering option is always preferable comparing to the battery investment and its overall maintenance.

Each State is having its Net metering policy and as per rules and regulations the system can be integrated to the grid and in an overall the benefits will be more by comparing with the overall investment of the system.

VII. CONCLUSION

The hybrid Energy system integrated with grid for a domestic house is validating with simulation result as indicated in results. Hence, before planning for any solar rooftop either off-grid and on-grid HOMER simulation is giving best results. A manual measurement of energy generated in a given month are almost matching with the simulation result with HOMER. Hence, with this approach for any design of large-scale PV system can be designed before project real implementation. For Detailed Project Report (DPR) this type of approach is very useful for manual analysis by authenticating with simulation method.

REFERENCES

1. Florides, Georgios A., et al. "Modelling, simulation and warming impact assessment of a domestic-size absorption solar cooling system." Applied Thermal Engineering 22.12 (2002): 1313-1325.
2. Tina, G., S. Gagliano, and S. Raiti. "Hybrid solar/wind power system probabilistic modelling for long-term performance assessment." Solar energy 80.5 (2006): 578-588.

3. Biencinto, Mario, et al. "Simulation and assessment of operation strategies for solar thermal power plants with a thermocline storage tank." Solar Energy 103 (2014): 456-472.
4. Calise, Francesco, Massimo Dentice d'Accadia, and Antonio Piacentino. "A novel solar trigeneration system integrating PVT (photovoltaic/thermal collectors) and SW (seawater) desalination: dynamic simulation and economic assessment." Energy 67 (2014): 129-148.
5. Khatod, Dheeraj Kumar, Vinay Pant, and Jaydev Sharma. "Analytical approach for well-being assessment of small autonomous power systems with solar and wind energy sources." IEEE Transactions on Energy Conversion 25.2 (2009): 535-545.
6. Bendato, Ilaria, et al. "Stochastic techno-economic assessment based on Monte Carlo simulation and the Response Surface Methodology: The case of an innovative linear Fresnel CSP (concentrated solar power) system." Energy 101 (2016): 309-324.
7. Nguyen, Andu, et al. "High PV penetration impacts on five local distribution networks using high resolution solar resource assessment with sky imager and quasi-steady state distribution system simulations." Solar Energy 132 (2016): 221-235.
8. Calise, F. "Design of a hybrid polygeneration system with solar collectors and a solid oxide fuel cell: dynamic simulation and economic assessment." International Journal of Hydrogen Energy 36.10 (2011): 6128-6150.
9. Shirazi, Ali, et al. "Transient simulation and parametric study of solar-assisted heating and cooling absorption systems: An energetic, economic and environmental (3E) assessment." Renewable Energy 86 (2016): 955-971.
10. Vorobiev, Yu, et al. "Thermal-photovoltaic solar hybrid system for efficient solar energy conversion." Solar energy 80.2 (2006): 170-176.
11. Yang, Hongxing, Lin Lu, and Wei Zhou. "A novel optimization sizing model for hybrid solar-wind power generation system." Solar energy 81.1 (2007): 76-84.
12. Swain, M.K., Sabat, R.R., Das, B. and Sahu, R., Enhancement of Power Quality for Grid Connected Wind Energy System using Smart-STATCOM. Yang, Hongxing, Zhou Wei, and Lou Chengzhi. "Optimal design and techno-economic analysis of a hybrid solar–wind power generation system." Applied Energy 86.2 (2009): 163-169.
13. Yang, Hongxing, et al. "Optimal sizing method for stand-alone hybrid solar–wind system with LPSP technology by using genetic algorithm." Solar energy 82.4 (2008): 354-367.
14. Pradhan, Smruti Ranjan, et al. "Design of standalone hybrid biomass & PV system of an off-grid house in a remote area." Smruti Ranjan Pradhan et al Int. Journal of Engineering Research and Applications 3.6 (2013): 433-437
15. Lakshmi, MV Santhi, C. Sai Babu, and S. Prasad. "Design of off-grid homes with renewable energy sources." (2012): 297-303.
16. Prasad, G. R. K. D. S., D. K. V. K. Reddy, and C. H. Saibabu. "Integration of renewable energy sources in Zero energy buildings with economical and environmental aspects by using HOMER." International Journal of advanced engineering sciences and technologies 9.2 (2011).
17. Perumal, K. Muruga, Ch Saibabu, and GRKD Satya Prasad. "Performance optimization of a rooftop hybridized solar PV-AC grid assisted power system for peak load management." International Journal of Engineering Research and Applications (IJERA) 2.3 (2012): 2196-2201.
18. Has, S. Chandra, P. Ajay-D-Vimalraj, and GRKD Satya Prasad. "Power enhancement of wind energy conversion system using hybrid method." International Journal of Advanced Engineering Sciences and Technologies, Vol 7 (2011): 248-253.
19. Singh, T. C., et al. "Design features of energy storage systems for Green buildings: an economic comparison with off-grid and on-grid solutions." International Research Journal of Engineering and Technology 3.5 (2016): 38-42
20. Prasad, GRKD Satya, K. Vijaya Kumar Reddy, and Ch Saibabu. "Hybrid Solar-Kitchen waste based plant for Green buildings: An approach to meet the standards of Zero energy buildings." International Research journal of Engineering and Technology 2.8 (2015): 1335-1340.

AUTHORS PROFILE

Balaram Das received B.Tech (EEE) from & M. Tech in ECE, from BPUT with First Class. At present working as Associate Professor in Department of EE, GIET University. He is a Life member in ISTE, SESI, CSI and IE. His area of interest is Power systems, Renewable power systems, Zero Energy Building, Predictive Maintenance.

GRKD Satya Prasad received M.Tech in Electrical power systems from JNTU, Ananatapur. He is a research scholar in JNTU Kakinada and currently working as Associate professor in the Dept. of EEE in Gandhi Institute of Engineering and Technology University, GUNUPUR. He is a member of IEEE, ISTE, CSI, ISTE and SESI. He publsihed many papers in natioanl and international journals and conferneces. His reserch areas of interest are Power systems, Distributed generation, Energy conservation and renewable energy systems.

Dr. Ch. SAI BABU graduated from Andhra University (EEE), M. Tech from Regional Engineering College, Warangal and PhD from Jawaharlal Nehru Technological University, Hyderabad. He is Professor in Dept. of EEE JNTU, Kakinada. He has published many papers in in National and International Journals and Conferences. His area of interest are Power electronics, Distributed generation and renewable energy systems.

Mrs. Swarna Prabha Sadangi graduated from Biju Patnaik University of Technology (BPUT) in the year 2010. She was working as an Expert Engineer in OTELP, ITDA Odisha. Her area of interest is zero energy building and Hybrid renewable energy system.

Retrieval Number: J97720881019/19©BEIESP
DOI: 10.35940/ijitee.J9772.0981119
Journal Website: www.ijitee.org

Published By:
Blue Eyes Intelligence Engineering
and Sciences Publication (BEIESP)