International Journal of Innovative Technology and Exploring Engineering (IJITEE)
ISSN: 2278-3075 (Online), Volume-8 Issue-11, September 2019

Transformer Optimal Protection using Internet of Things

Rajeshwar Rao Arabelli , D. Rajababu

Abstract: ***In power system transmission and distribution transformers plays crucial role. As per the consumer requirement the transformers either step up or step down voltages and deliver the power. Sometimes they are operating under overload conditions. In this paper, Microcontroller and different types of sensors can be used to protect the transformer against over load and various internal faults. Real time monitoring of the transformer is also an important part in the transformers protection. A prototype hardware module has designed to sense the temperature raise and pressure in the transformer tank using micro controller based sensors. The monitoring and protection can avoid various faults in the transformer and it can give better performance.***

Keywords: ***Optimal protection, Transformers, Micro controllers, Sensors, Relays and Cloud data***

I. INTRODUCTION

The transformers are very important devices in the power system transmission and distribution systems. They are also very costly. They are used in small distribution systems for serving large number of units. As the transformer applications are increasing it is necessary to protect transformers. Therefore protection of transformers is very important. [1] [4].

The electrical load on the power system networks rapidly increases due to the day-by-day population increase. With increase in the load demand the transformers get overloaded and it leads to develop various types of internal faults in the transformer. In order to avoid damage to the transformer, need to control against overload and fault current tripping to the transformer. The transformer can be protected in Differential and microprocessor based protection systems. Here, it is protected with microcontroller based protection with Internet of Things (IoT) [2] [5].

The protective relays should operate accurately and reliable. From the several years, static relay are used for the power systems. Later, new types of relays are introduced which can be controlled with microcontroller. As the digital technology advances, the digital hardware becomes low cost, reliable Operation and simple in construction. Hence, in electric power system the transformer can be protected with the use of digital relays [3] [6].

II. PROBLEM FORMULATION

The modern power system must operate under desired conditions. They can be achieved by using reliable and accurate protective devices. In this paper, microcontroller based sensors has been used to protect the transformers from overload and fault conditions. The figure.1 shows the various blocks of protective system.

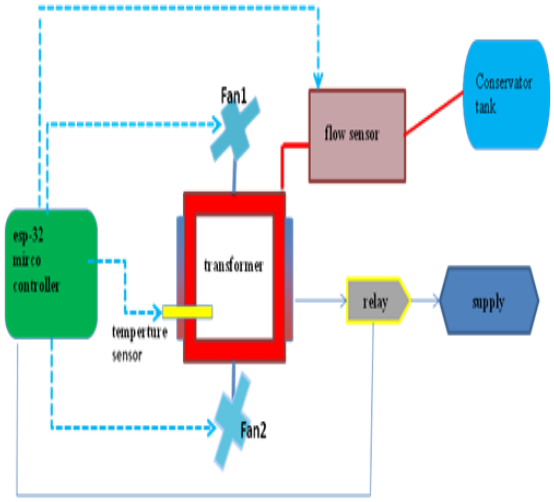

Fig.1: Block diagram of Protective System

III. COMPONENTS

A. Microcontroller(ESP 32)

Fig.2: ESP 32

Manuscript published on 30 September 2019.
*Correspondence Author(s)
Rajeshwar Rao Arabelli, Assistant Professor, Department of ECE and Head, Center for Embedded Systems & Internet f Things. S R Engineering College, Warangal, Telangana, India
Email: rajeshwarrao432@gmail.com
D.Rajababu, Associate Professor, Department of EEE, S R Engineering College, Warangal, Telangana, India
Email: durgamrajababu@gmail.com

ESP32 microcontroller is a low-power System On Chip integrated with high speed dual core processors along with Wi-Fi, Bluetooth classic and BLE, low-noise receive amplifier, RF balun, power amplifier, power management modules, filters and antenna switches.

The added peripheral features of ESP32 improve the application with reduced printed circuit board requirements. It can operate reliably in range of temperature from –40°C to +125°C. The figure.2 shows the image of ESP32.

B. Transformer

The transformer is the static device that operates according to the principle of electromagnetic induction. It is used to transfer the electric current from one circuit to another without any variation of their frequency. With electromagnetic induction, the transfer of energy from one circuit to another is done by mutual induction. i.e., the flux generated in the primary winding is coupled to the secondary winding. The figure.3 shows the image of transformer.

Fig.3: Transformer

C. Relay

Relay is a two-way switch which operates electrically and works on the principle of an electromagnetic attraction. One electrical control circuit relays to open and close your contacts through other circuit. Relay divided into two parts: the primary and secondary. The primary section of the relay generates supply by hand. This is said to supply operating voltage of relay and secondary section of contactors to connect or disconnect mechanics. Here as shown in figure. 4, two channel relay module is used as a circuit breaker to isolate the transformer when faults occur.

Fig.4: Two channel relay module

D. Temperature sensor

The DS18B20 is a waterproof temperature sensor with built in 12bit ADC and communicates over a one-wire bus which uses only one wire of digital pin for communication. It is pre-wired and ideal for distance reading or in wet conditions. It measures temperature in the range of -55 to 125°. Here as shown in figure. 5, temperature sensor (DS18B20) is used to measure the temperature in transformer oil tank to detect the faults.

Fig.5: Temperature sensor

E. Flow Sensor

The flow sensor is used to measure the flow of water / liquid. It is also called a Hall effect water flow sensor. This sensor is aligned with the water line and contains a wind turbine sensor to measure the amount of liquid that has passed through it. There is an integrated Hall effect magnetic sensor that delivers an electrical impulse every turn. The Hall sensor is sealed against the water supply and ensures that the sensor stays safe and dry. As shown in figure. 6, on the sensor, water flow indicator will be present and it indicates the direction of flow of water. Here it is used to measure transformer oil overflow from the tank when faults occur.

Fig.6: Flow sensor

F. Fan

These are used in project for cooling the transformer oil.

IV. IMPLEMENTATION & RESULTS

The transformer is a major part in the power system, it can be monitored and operate under reliable and economic manner a prototype system is designed is shown in figure.7.

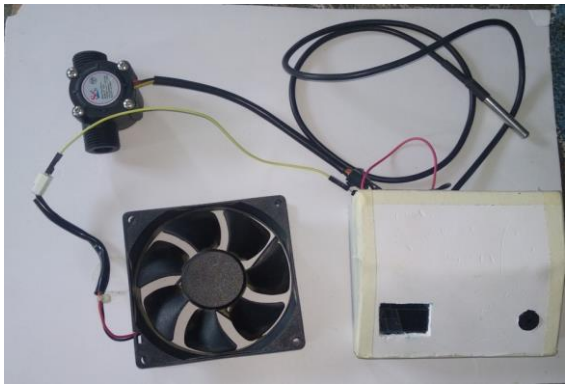

Fig.7: Image of hardware implementation

In this protection microcontroller (ESP-32) connected with flow sensor, temperature sensor, fans, buzzer and relay. The flow sensor is placed between transformer tank and conservator tank and temperature sensor is placed in the transformer tank.

When the temperature of transformer oil is greater than a certain temperature due to over load and weather condition, it is sensed by the temperature sensor and this information is given to the microcontroller [7] and based on the temperature one or two fans are switched ON. If the temperature is not controlled and it is greater than pre-specified value the relay disconnect the loads.

Similarly when the fault occurs in transformer, the oil will flow from main tank to conservator tank. This oil flow can be sensed by flow sensor and it will be send to microcontroller. Then the fault section will be isolated by the relay operation. If the relay will not be operated during the fault conditions, buzzer will give an indication [8]. All this information we can observe in the cloud with the Internet of Things (IoT)[9]. The operation of the designed circuit is shown figure.9.

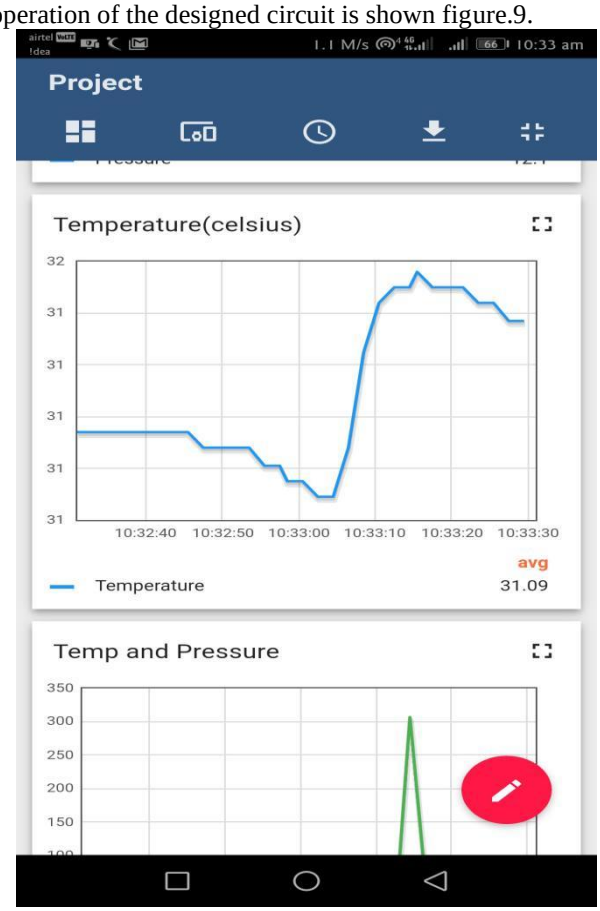

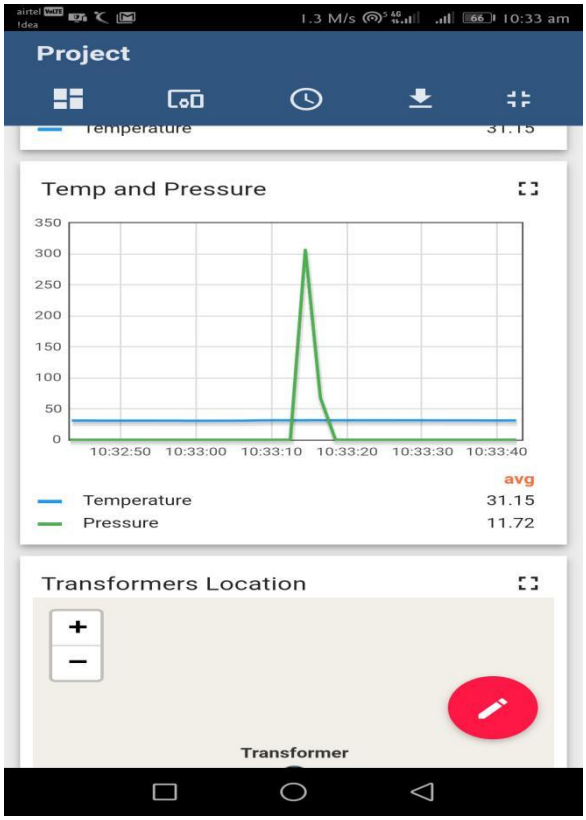

Fig.8: Result analysis in cloud

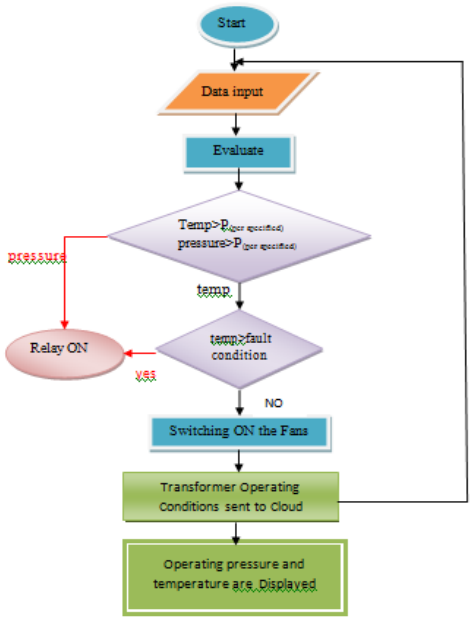

Fig.9: Implementation flowchart of the Project

V. CONCLUSION

In the power system transformer is major equipment. For the reliable and economic operation proper protection is required. The microcontroller based relay can be implemented for the optimal protection of transformer. This type of protection can be useful for the oil filled and air insulated transformer.

The real time data can send to the cloud and the protection can be monitor by analyzing the data through online.

REFERENCES

1. S.M.Bashi, N. Marium and Rafa (2007) "Power Transformer Protection Using Microcontroller- Based Relay." Journal of Applied Science 7(12): 1602-1607, 2007.ISSN (1812-5654)
2. Kajal Salunkhe,SanaShaikh,B.S.Kunure "Transformer Protection Using Microcontroller Based Relay & Monitoring Using GSM Technology", International Engineering Research Journal (IERJ) Volume 2 Issue 2 Page 813-817, 2016, ISSN 2395-1621.
3. SM Bashi, N.Marium and A.Rafa " Power Transformer Protection Using Microcontroller-Based Relay" Journal of Applied science, 7(12), 1602-1607,2007
4. Arpit Rana, Jeet Shah, Anuradha Deshpande, "Simulation for Power Transformer Protection Using Microcontroller Relay." International Journal Of Scientific Engineering and Technology, Volume-4. ISSN: 2277-1581. June 2015
5. Akanksha Rani Kumbhaj, Manjusha Silas, Vivek Bargate "Intelligent Protection Scheme For Power Transformer" International Journal of Advanced Research in Science, Engineering and Technology Vol. 5, Issue 6 , June 2018
6. Armando Guzman, Normann Fischer, "Improvements in transformer protection and control",https://www.researchgate.net/publications/224471753,IEEE Xplore, May 2009
7. Matteda Deepa and A.Rajeshwar Rao, "A Gesture Learning Interface for Stimulated Robot Path Shaping ", International Journal of Research hung on October, 2015 pg.no 1046-1053, ISSN(Print) 2348-795X, ISSN(Online) 2348-6848, Vol 2 Issue 10.
8. D.Nikitha And P.Anuradha, "Driver Assistance along with Safety System for Car", International Journal of Scientific Engineering and Technology Research hung on September, 2016 pg.no 5518-5524, ISSN 2319-8885, Vol 5 Issue 27.
9. B.Swetha and G.Renuka, "Structure Of IoT Based Intelligent Controlling Of Appliances And Parameter Monitoring System for Environment" International Journal of Advanced Research Trends in Engineering and Technology (IJARTET),Vol. 4, Special Issue 2, January 2017, ISSN 2394-3777 (Print) ISSN 2394-3785 (Online),Pg no-234-239.

AUTHORS PROFILE

Rajeshwar Rao Arabelli, Received B.Tech in Electronics and communication Engineering from BITS affiliated to JNTU Hyderabad and M.Tech from JITS,Warangal JNTU Hyderabad. Currently working as Head of Center for Embedded Systems and IoT and Assistant Professor of ECE Department in S R Engineering College, Warangal and his areas of interest is Embedded Systems and Internet of Things.

Mr.D.Rajababu, received B. Tech degree in Electrical and Electronics Engineering in 1999 from Jawaharlal Nehru Technological University College of Engineering, Ananthapuram, Andrapradesh and M. Tech in Electrical Power Systems in 2002 from the same college. He is presently pursuing Ph.D from the Jawaharlal Nehru Technological University, Hyderabad and working as Associate Professor of EEE Department in S R Engineering College. His interested areas are Power system analysis and renewable energy sources.