International Journal of Innovative Technology and Exploring Engineering (IJITEE)
ISSN: 2278-3075 (Online), Volume-8 Issue-11, September 2019

Robust Video Watermarking using Secret Sharing and Cuckoo Search Algorithm

S. Bhargavi Latha, D.Venkata Reddy, A.Damodaram

Abstract: ***Cuckoo search algorithm is an efficiently designed algorithm for optimization based on the behavior of blood parasitism of Cuckoo species. The main advantages of Cuckoo Search algorithm are its simplicity, less computational time and efficiency. With said advantages, a novel method on video watermarking using Cuckoo search algorithm in DWT-SVD transform domain is proposed. SSIM, BER are used for fitness function in optimization function. The method proposed uses secret share method to achieve more security of watermark. The experimental results prove that the proposed video watermarking method provides good imperceptibility and more robust to attacks compared to few related methods.***

Keywords: **Cuckoo search algorithm, Optimization, Secret Sharing, Video Watermarking.**

I. INTRODUCTION

To develop a watermark method, the key factors considered are robustness and Invisibility. A Video watermarking method can be characterized in to two types that is spatial domain method and transform domain method. In Transform domain technique, the watermark embedding is done by modifying the transform coefficients. In the recent past, the transform domain video watermarking technique often uses the discrete cosine transform (DCT) , the discrete Fourier transform (DFT), the discrete wavelet transform (DWT) and matrix decomposition, where singular value decomposition(SVD), QR decomposition and Schur decomposition are included in common matrix decomposition. In digital watermarking, the individual transform technique and decomposition technique will possess their own pros and cons.If more than one Transforms are combined, it may compensate the drawbacks of each transform, more over the watermarking method's efficiency can be enhanced. The watermarking techniques that uses DWT will have some advantages such as multiresolution representation and improved energy compression and the robustness is high towards image processing attacks and less robust towards geometric attacks. Geometric features of an image can be extracted by using matrix decomposition method and the robustness is more against geometric attacks. Consequently, he combination of DWT and matrix decomposition are applied in watermarking techniques takes advantages of both the methods and thus demonstrates robustness on geometric and image processing attacks[1-8]. Though the traditional watermarking methods provide good computing speed, they didn't automatically balance the invisibility and robustness because the said features will have conflict by nature with each other. Also, in other hand the tradeoff between the said features can be seen as an optimization issue which invokes opportunities in terms of research. Nature inspired algorithms (NIAs) such as particle swarm optimization (PSO) [9, 10], genetic algorithm (GA) [11], artificial bee colony (ABC) [12, 13], differential evolution [14, 15], ant colony optimization [16], Firefly algorithm[17] have been used to fix the issue with optimizatin. Cuckoo Search (CS) is one among the metaheuristic algorithms that Xin-She Yang and Suash Deb have developed [18] in 2009 being inspired by the concept of constrained blood parasitism behavior of few cuckoo species which uses other birds nest to lays eggs.The studies have suggested in recent past that CS is more effective than other algorithms inspired by nature such as PSO and GA [19].

II. BACK GROUND

A. Discrete wavelet transforms

DWT is referred as a mathematical transform that has many engineering and computer science applications especially used in image compression of JPEG2000 format. Each DWT level decomposes a video frame or image into four sub-bands which is outlined in Fig 1. After one level of DWT most of the information in the original image is concentrated in the LL sub-band after one stage of DWT.

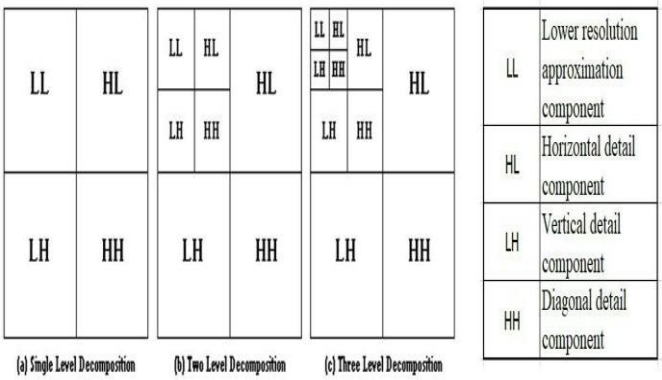

Fig 1: Discrete Wavelet Transform

Manuscript published on 30 September 2019.
***Correspondence Author(s)**
S. Bhargavi Latha*, CSE Department, GRIET, Hyderabad, India. Email: s.bhargavilatha@gmail.com
Dr D.Venkata Reddy, ECE Department, MGIT, Hyderabad, India Email: dasari_reddy@yahoo.com
Dr A.Damodaram, CSE Department, SIT, JNTUH, Hyderabad, India, Email:damodarama@rediff.com

B. Singular value decomposition (SVD)

Singular value decomposition refers to a popular and generic method that has distinct applications from solving linear least-squares problems analysis to calculating pseudo inverse of a matrix. In this Method, the complexity of an Image or Video is minimized through isolation of image matrix in to U*S*V, where S is referred to diagonal matrix of singular values of the original matrix structured in a systematic way in decreasing pattern whereas orthogonal matrices are referred by U and V with singular values.

The use of SVD has several advantages against digital image processing. First, the matrices size from SVD transformation isn't standard and may be a rectangle or square. Second, the possibility of Singular values getting affected is less even if a normal image processing is performed.

C. Cuckoo Search (CS)

Cuckoo Search is among the recent past meta-heuristic algorithm that was developed by Yang and Deb[18]. Cuckoo are intriguing birds because of factors like the pleasure sounds they produce also due to their strategy in reproduction which is aggressive. Some species, like the Guira and Ani cuckoos uses communal nests to lay their eggs although other eggs might be removed to boost their likelihood of hatching their eggs. In order to keep it easy for understanding Cuckoo Search is purely dependent on the below points.

- A cuckoo lays an egg and the nest is chosen randomly for its egg.
- High-quality egg nests are likely to be taken for the future generations.The number of host nest available is fixed where as the host bird is likely to discover the egg using a probability Pa ∈ [0, 1].

Many researchers have proposed modifications to enhance CS standard algorithm performance, such as Kanagaraj [20] used a combination of CS and Genetic Algorithm (GA) to enchance the search performance. Yang and Deb has drafted a mixture of Cuckoo Search and Lévy flight behavior of several birds and different fruit flies. The benefit of the stochastic approach through Lévy flight is that it is efficient when compared to the standard Cuckoo Search in exploring the search space due to the advantage of the step-length which is dramatically longer in real time. With that said properties of Lévy flight function and CS the pseudo-code of CS via Lévy flight as succeeding Algorithm 1 can be formulated.

Algorithm 1. Cuckoo Search via Lévy flights.
Objective function $f(x)$, $x = (x1, \ldots, xd)T$.
Generate initial population of n host nests xi ($i = 1, 2, \ldots, n$).
while ($t <$ MaxGeneration) *or* (*stop criterion*) **do**
Get a cuckoo randomly by Lévy flights evaluate its quality/fitness Fi.
Choose a nest among n (say, j) randomly.
if ($Fi > Fj$) **then**
replace j by the new solution.
else
A fraction (pa) of worse nests are abandoned and new ones are built.
Keep the best solutions (or nests with quality solutions).
Rank the solutions and find the current best.
end
Post process results and visualization
$Xi(t+1) = Xit + \alpha \oplus$ Lévy(λ). (1)
End

D. Secret Sharing

The watermark can be more secured with the use of Secret Sharing Scheme [21]. Similar to (2, 2) Visual secret sharing (VSS) in Proposed method two share blocks are created for each pixel of the secret image. The two share blocks that created are referred as the P-share "principal share" block and the C-share "complementary share" block. The differences between proposed scheme verses the VSS scheme are:

a) In VSS Scheme, the input image is split in to two share images, however in the proposed scheme the share image (P-share) is formed depending on features of input image, watermark image and later the second share image(C-share) is formed based on the P-share and features of input image.
b) In VSS, Visual-OR Operation is used where as in proposed method XOR operation is used by secret share scheme.

The share image is procured on the basis of feature of the original video frame. The selected frame is converted into gray values. The frame is split into 32*32 blocks. A 3-level Discrete wavelet transform is applied on each block. A four 4*4 sub-bands LL, LH, HL, HH are obtained. Each sub-band is applied to SVD to obtain singular values. Mean value of all first singular values of sub-bands is determined. Based on the mean value, feature type (n) is determined by using following conditions.

Condition 1: - In case of any one singular value < M, then n = 1
Condition 2: - In case of two singular values < M, then n = 2
Condition 3:- In case of any one singular value > M, then n = 3
Condition 4:- If all four singular values are same and then all equal to M.

The feature share image and the watermark generate a principle share image. There are 2 x 2 pixels in each of the two share blocks. A 2 * 2 share block is generated for each watermark bit. Table 2.1 represents the mapping table utilized in the proposed scheme. The process of mapping of each pixel of a watermark in to a 2*2 block size is considered as pixel expansion.

The process of encoding utilizes few types of features extracted and the respective watermark to create the principle share image share blocks. The generation of principle share blocks used in watermarking is according to the description in Table 2.1. The XOR Operations is applied on the principle share image using decoding process (refer to Table 2.2) and the respective feature share blocks got from the suspect image to retrieve the scrambled watermark which is described in section III. The redundant noise caused by the pixel-expansion would be removed effectively using watermark reduction. The unscrambled watermark produces redundant background noise because the pixel expansion impact triggered by the secret sharing when the initial watermark pixel is white. To remove redundant noise, the reduction process should be applied.

Depending the block generated by XOR, any one of the steps mentioned below can be adapted :

1. The block is reduced to a black pixel, whenever the proportion of white pixels of the block generated is equal to 1 or 0.

2. The block is reduced to a white pixel, whenever the proportion of white pixels of the block generated is larger than 1.

The reduction conditions and the respective actions are outlined in Table 2.3. The scrambled watermark is finally been unscrambled so that the visually recognizable watermark is achieved.

Table 2.1 Mapping Table

Feature Type n	Mean Value Location	The water mark Pixel is white		P-Share XOR-C-Share	The water mark Pixel is Black		P-Share XOR-C-Share
		P-Share	C-Share		P-Share	C-Share	
1	a<M<b, c, d						
	b<M<a, c, d						
	c<M<a, b, d						
	d<M<a, b, c						
2	a, b ≤M<c, d						
	c, d≤ M<a, b						
	a, d≤ M<b, c						
	b, c≤ M<a, d						
	a, c≤ M<b, d						
	b, d≤ M<a, c						
3	b, c, d≤ M<a						
	a, c, d≤ M<b						
	a, b, d≤ M<c						
	a, b, c≤ M<d						
4	M=a=b=c=d						
a B c D	a, b, c, d represents first singular values of four bands of DWT and M is the mean average value of a, b, c, d						
P-Share: Principle share; C-Share: Complementary share.							

Table 2.2 XOR Rule

Pixel -1	Pixel -2	Pixel -1 XOR Pixel-2
■	□	□
□	■	□
■	■	■
□	□	■

Table 2.3 Watermark reduction scheme

Condition	Action	Condition	Action
The number of white pixels of the black is equal to 1 or 0	Reduce the result block in to a black pixel Example	The number of white pixels of the black is greater than 1	Reduce the result block in to a white pixel Example

III. PROPOSED ALGORITHM

A. The watermark embedding phase

There are three stages involved in embedding phase: the share image generation stage, finding suitable scaling factor and the p-share embedding stage. With the use of MATLAB function the Video is converted in to certain number of frames. To provide robustness for frame drop attacks the entire watermark bits are embedded in to a single frame. Selection is R Channel of frame is done for embedding watermark because of the visibility features. Block diagram for embedding is shown in Fig 2.

P-share Generation

The selected frame is converted into gray values. Further, the secret share is generated using these gray (frame) values and scrambled watermark.

The procedure is outlined in the steps below.

i. The frame is divided into 32*32 blocks.

ii. For each block 3-level DWT is applied. It gives four 4*4 sub-bands(LL, LH, HL, HH).

iii. The Singular values are obtained by applying each sub band in to SVD.

iv. Mean value of all first singular values of sub-bands is determined.

v. Feature value is determined based on the mean value,

vi. Using table 2.1, The principal share block is generated using the feature type n, the location of average M , and the pixels of the corresponding scrambled watermark pixel.

P-Share embedding stage

The procedure is described as follows:

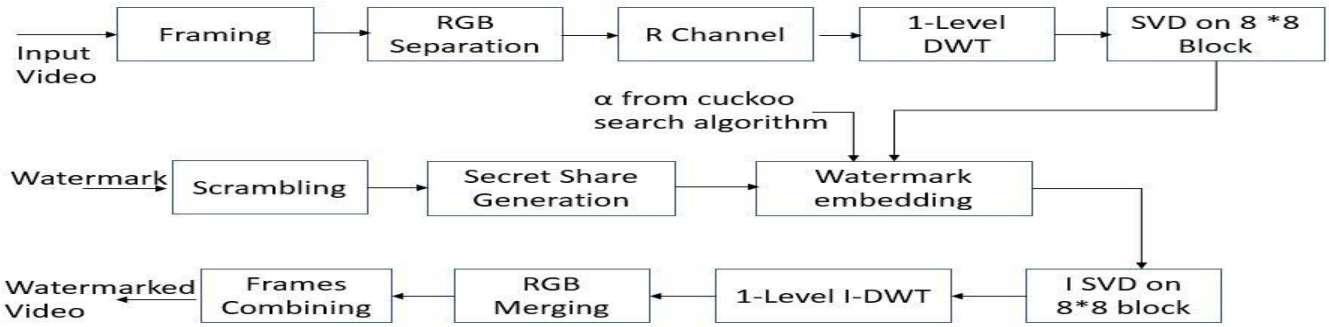

Fig 2: Block diagram for Embedding

i. Any length of frame is resized into 480*640.
ii. R channel of frame is selected for inserting the watermark.
iii. Watermark is scrambled in the other Hand,
iv. Secret share is generated based on the scrambled watermark and gray values of Video frame.
v. With the use of Cuckoo search method, the scaling factor is calculated in order to insert secret share in to the frame.
vi. The insertion procedure is as follows:
1. The selected R frame is applied to DWT.
2. LL Band of DWT is divided into 8*8 blocks.
3. Each block is applied to SVD. Singular components are replaced with watermark bits by using the following formula.

$$Ss(1,1)=Ss(1,1)+alpha*wm(k) \quad (1)$$

vii. Inverse SVD is applied on each block. And inverse DWT is applied on R component.

Finding optimal scaling factor using cuckoo search algorithm

Robustness and invisibility are the main factors which has gained attention of most researchers in digital watermarking methods. Also, it is the fact that there is lot of contradiction and interrelation between invisibility and robustness. Hence the problem of how to achieve a balance between two desirable but incompatible features is a key point to satisfy the need of application. Nature Inspired Algorithms (NIAs) have got more attention for researchers in recent years to take on the issue of tradeoff between robustness and invisibility. In general, the main factors of NIA's are watermark embedding position and watermark embedding strength. In this paper, the cuckoo search algorithm is used to find the right watermark embedding factor for the desired performance results of the Video Watermarking process. Measurement of Invisibility is often done by Performance or Reliability metrics such as PSNR-peak signal to noise ratio, NC-Normalized cross correlation, SSIM- Structural similarity index measure and Corr- correlation coefficient. Also, metrics such as SSIM, BER and NC are used to measure robustness where as the PSNR is used to calculate the similarity between the original video frame and watermarked video frame. The similarity between two images is measured by using BER, SSIM and NC.

Performance metrics are defined mathematically as:

$$MSE=\frac{\sum_{m,n}[I1(m,n)-I2(m,n)]^2}{m*n} \quad (2)$$

$$PSNR\ (I_1, I_2)= 10\log_{10}\left(\frac{R*R}{MSE}\right) \quad (3)$$

$$NC(I_1, I_2)=\frac{\sum_{m,n} I1(m,n)*I2(m,n)}{\sqrt{\sum_{m,n} I1(m,n)^2}*\sqrt{\sum_{m,n} I2(m,n)^2}} \quad (4)$$

Where I1 and I2 are two images with size m*n. R=255 if image is 8 bit image.

$$SSIM\ (I1, I2) = \frac{(2\mu1\ \mu2+c1)(2\sigma12+c2)}{(\mu1^2+\mu2^2+C1)((\sigma1^2+\sigma2^2+C2)} \quad (5)$$

$\mu1$ and $\mu2$ are the average and σ1 and σ2 are the image variance of image I1 and I2 respectively. σ12 refers to covariance of images I1 and I2.C1 and C2 are the variables that is used to stabilize division.

$$BER=\frac{\sum_{m,n}[I1(m,n)\oplus I2(m,n)]}{m*n} \quad (6)$$

Ex-or operation is denoted by $\oplus$.
Many researchers proposed various functions in optimized watermarking to attain a watermark balance and robustness. In most of the scenarios, the invisibility feature of a watermark is measured using NC and PSNR and the robustness feature is measured using NC and BER.

$$F=PSNR(X,Xi')+\Phi*[NC(w,w'i)+\sum_{i=1}^{N} NC(w,w'i) \quad (7)$$

$$F=PSNR(X,Xi')+30.\sum_{i=1}^{N} BER(w,w'i) \quad (8)$$

$$F= PSNR(X,Xi')/100+\sum_{i=1}^{N} NC(w,w'I) \quad (9)$$

$$F=\frac{N}{\sum_{i=1}^{N} Corr(w,w'i)} - Corr(w,w'i) \quad (10)$$

$$F=10.\ [1-SSIM(X,Xi')]+\frac{1}{N}\sum_{i=1}^{N} BER(w,w'i) \quad (11)$$

The combination of BER and SSIM is used as objective function in the proposed optimized watermarking algorithm

$$F=[1-SSIM(X,Xi')]+\Phi.\frac{1}{N}\sum_{i=1}^{N} BER(w,w'i) \quad (12)$$

Where Φ is weight factor, 'X and X_i' refers to original-frame and watermarked-frame respectively. w is the original watermark, w'_i refers to the extracted watermark under i^{th} attack. N refers to total number of attacks.

The main reasons for opting the objective function (Eq 12) using BER and SSIM are: (i) Papakostas [22] et.al proved that SSIM is higher than traditional PSNR in terms of Image quality. (ii) As a robustness measurement index, BER can more logically describe the error than NC and SSIM. The intent function (Eq 12) proposed in this paper is very close to (Eq 11), but the weights in the two equations are different. The equation (Eq 11) is concentrated on imperceptibility whereas the proposed equation (Eq 12) is concentrated on robustness.

In this paper, the Φ = 30 is selected as weight factor as suggested by [17] due to the facts

(i) The proposed method mainly focusses on water-robustness and the robustness- weight must be larger or greater than invisibility of watermark.

(ii) The weight of the watermark's robustness should be less than some value as a means of achieving the need for invisibility in watermark (i.e. SSIM(X, Xw) > 0.9). The weight factor can be slightly adjusted to satisfy various requirements of said need. It is shown in the results that the proposed method concentrates on achieving a need for invisibility of watermark and also attains high robustness

.

Watermarking method based on Cuckoo search in DWT-SVD transform domain is represented as below and the respective flow chart is outlined in **Fig. 3:**

Step-1: Initialize the fundamental parameters of Cuckoo search and then generate random nests (set of scaling factors).

Step-2: Following operations are performed for each nest value.

i. According to the embedding procedure, the watermarked frame is obtained using the original frame and watermark using the selected scaling factor from the nest.

ii. On a watermarked frame, N-different attacks are applied. On the attacked frames, the extraction procedure is applied to extract watermarks.

iii. Compute SSIM in between original and watermarked frame and compute BER between original watermark and the extracted watermark with the help of findings and results of points i and ii.

iv. Objective function value is calculated by using formula mentioned below :

$$F=[1-SSIM(X,Xi')]+30.\frac{1}{N}\sum_{i=1}^{N} BER(w,w'i) \quad (13)$$

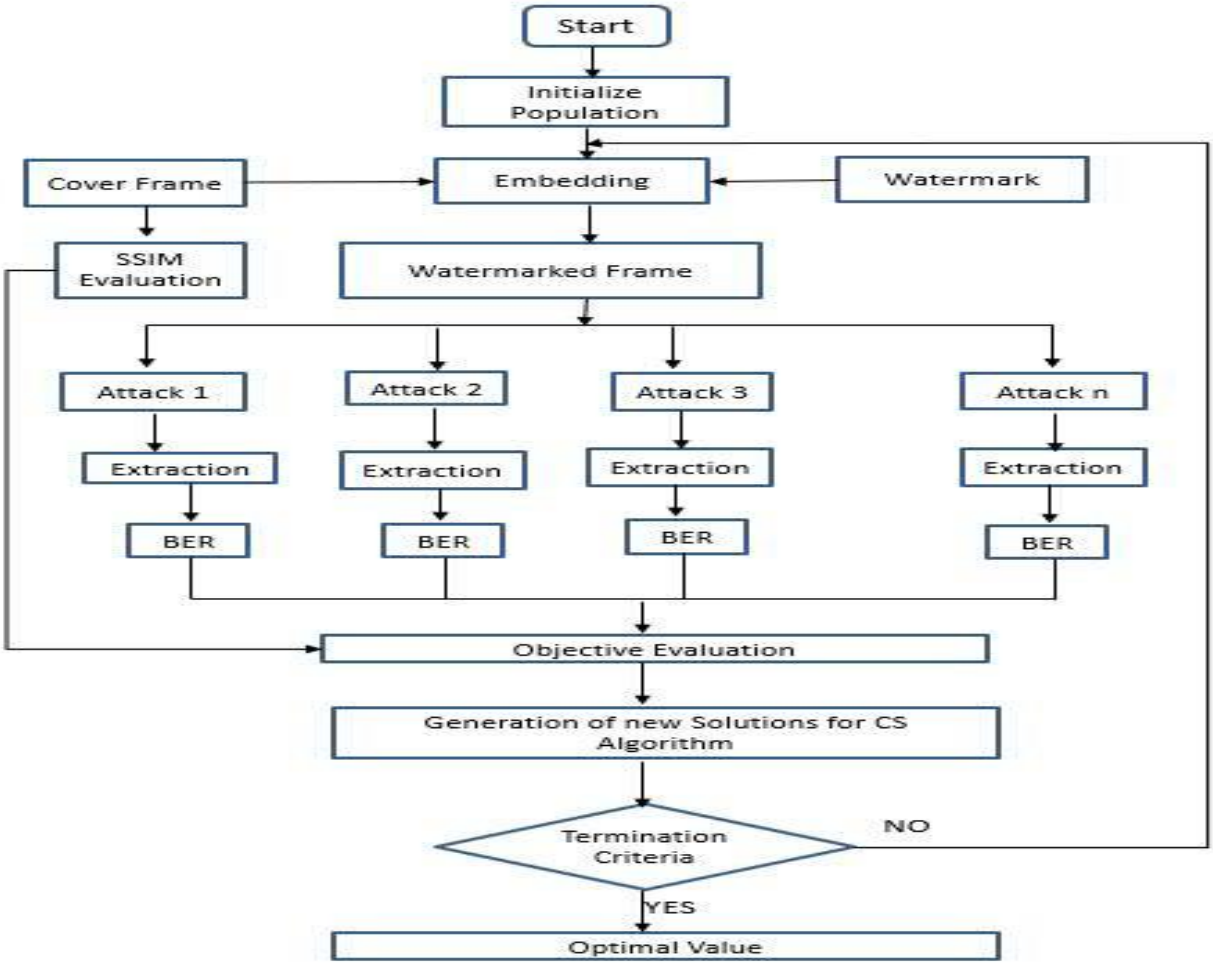

Fig 3. Flow chart for Cuckoo search algorithm

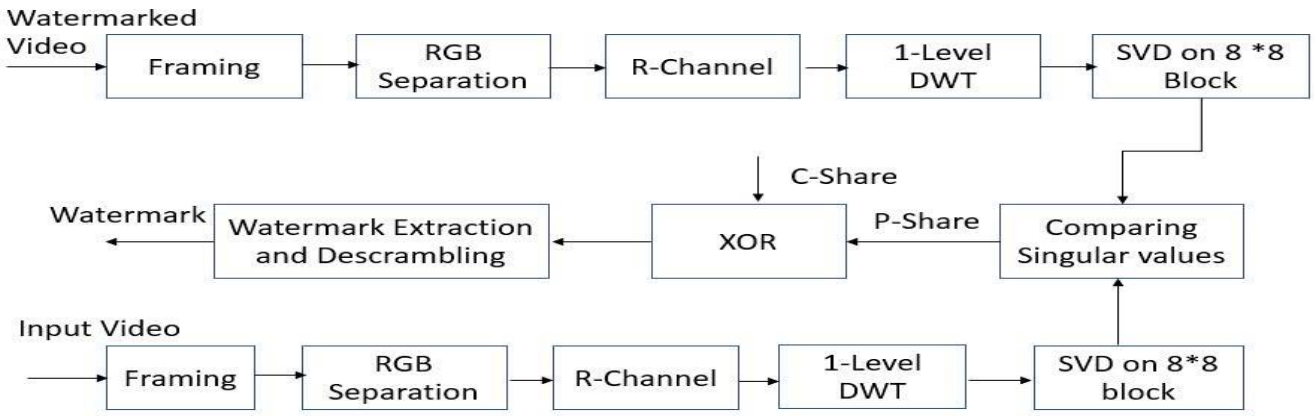

Fig4.Block diagram for Extraction

Step 3: Update the nest value.
Step 4: Until the iteration T reaches to maximum value the Steps 2 and 3 are repeated. The result would be the optimal watermark embedding factor.

B. The watermark Extraction phase

C-Share generation:
The C-share is generated similar to the P-share which is explained in the previous section. C-share is generated based on the original video frame, Mean of the Singular Values of the frame and table 2.1**.**

P share and watermark Extraction stage
The original and watermarked frames are used for extraction of p-share. The procedure is described as follows and block diagram is shown in Fig4:
i. Both original and watermarked frames of R channels are applied to 1-level DWT.
ii. Both LL-Bands are divided into 8*8 blocks. Each block of both frames are applied to SVD.
iii. Singular values are compared to retrieve p-share which is inserted at the previous section.
If $S_{ATK}(1,1) > S_{ORG}(1,1)$ then retrieve share bit is 1 otherwise it is considered as 0.
iv. Retrieve share is XORed with C-share. Then based on the number of bits in black and white, the watermark is extracted and it is descrambled.

IV. EXPERIMENTAL RESULTS

This section analyzes the invisibility and robustness of the proposed video watermarking technique. The experiment carried out in MATLAB Ver-R2014a with a PC of configuration with OS-Windows 7, Intel i3 core 1.7 GHz CPU, RAM size - 4 GB. In the proposed method, the measurement of the performance is carried out by considering of various types of videos consisting of sports videos, general movie videos, Cartoon videos, News Videos, Natural videos from geographical channel. The simulations are done by setting the size of watermark to 15x20 thus the size of secret sharing image doubles that of the watermark which is 30x40. Using the proposed method, the obtained secret share image
is inserted in to an avi format video of size 640x480. Any video format that is essential for embedding the watermark, can be converted into an avi format and a FFMPEG tool will convert the watermarked video back into original video. The evaluation of performance and robustness of the proposed method is carried by considering numerous image processing and video processing attacks.
Four video samples considered for our experiment are shown in **Fig 5.** Sample input watermark image, scrambled watermark and its secret share images are shown in **Fig 6.**
The initial Cuckoo search algorithm parameters are mentioned to n=10, pa=0.25, lb=8, ub= 15. The Max. no of iterations are defined to 20, weight factor (ϕ) adjusted to 30. To run Cuckoo search algorithm, scaling factor (α) is selected from 8 to max 15. We have chosen sports, cartoon, nature and news videos for this purpose.

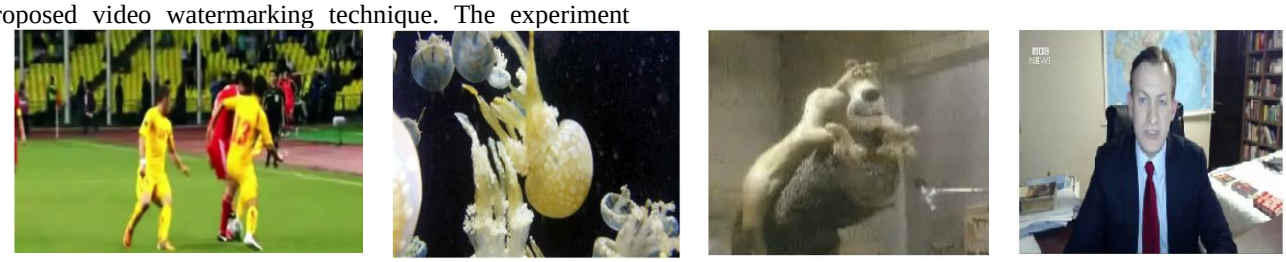

a) b) c) d)

Fig 5.Sample Video Frames

a) Sample watermark b) Scrambled watermark c) P-share d) C-share

Fig6. Sample Watermark and its shares

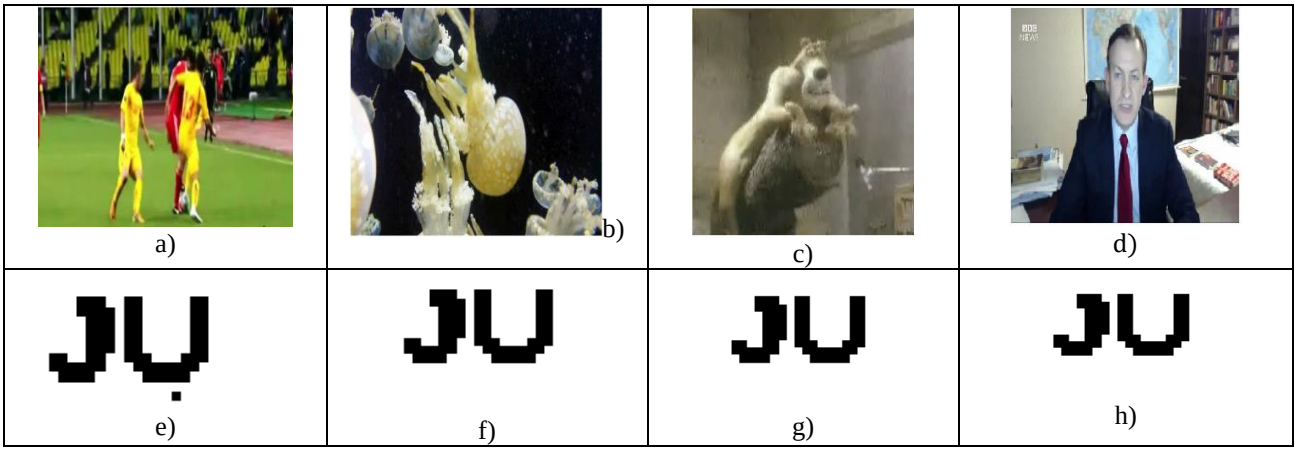

Fig 7Watermarked Frame and Corresponding Extracted Watermark

In this proposed method, the imperceptibility of the original image to the watermarked image is measured by SSIM.BER measure the robustness between the original watermark and the watermark extracted. Fig7 shows, watermarked frame and extracted watermark.
The Table 4 represents different metrics for the different genre of videos.

Table 4.Proposed Method Accuracy

Video Type	PSNR	SSIM	BER
Sports Video	53.9840	0.9992	0.3
Nature Video	54.8920	0.9991	0
Cartoon Video	53.3557	0.9989	0
News Video	54.4057	0.9990	0

A. Checking the Robustness of the method

We simulated various attacks over video which are generally occurred during the transferring of video over Internet. The following table5 shows the name of attack and its index.

Table 5. List of attacks

Attack index	Name of the attack
1	Resize
2	Salt and pepper noise
3	Gaussian Low pass filter
4	Cropping
5	Jpeg compression
6	Sharpening filter
7	Motion filter
8	Rotation

The following table6 shows average bit error rate for different kinds of attacks.

Table 6. Average bit erros

Attack Index	Sports Video	Nature Video	Cartoon video	News Video
1	18	13.33	0.66	10.66
2	29.6	39.33	30	41.66
3	0	0	0	0
4	9.6	10.33	10	10
5	0.33	0	0	0
6	8.66	9.33	3	7.66
7	6	0.66	0	1
8	8.33	8	7.33	7.33

Evaluation of the method is also done by comparing PSNR and SSIM against state-of the-art given in following table 7 [Considered Sports Video].

Table 7 Performance of the Proposed Method

Performance metric	BDWTSVD[23]	Level-3 DWT[24]	DWT[25]	Proposed Method
PSNR	45.67	46.8	46.45	53.98
SSIM	0.93	0.945	0.936	0.999

Evaluation of the method is also done in terms of average bit errors after applying several attacks against state-of the art is showed the following table8.

Table 8 Robustness of the Proposed Method

Attack Index	BDWTSVD[23]	Level-3 DWT[24]	DWT[25]	Proposed Method
Rotation -5 degrees	13.53	12.96	12.66	6.66
Rotation 5 degrees	13.59	12.96	12.69	6.66
MP4 compression(512Kbp)	9.96	9.03	9.72	7.03
Scaling 200%	0.06	0.054	0.045	0.03
Scaling 50%	0.15	0.102	0.09	0.06
Cropping 30%	0.03	0.036	0.03	0.009
MPEG2(1024Kbps)	8.79	7.59	8.94	6.54
Gaussian Filtering	0.267	0.243	0.213	0

V. CONCLUSION

In this, Cuckoo search algorithm and secret sharing in the DWT-SVD domain is suggested for a video watermarking. Robustness and invisibility features are tested by considering various types of videos for simulation experiments. The watermarked frames have better visual quality with high PSNR, SSIM values. To show the robustness of proposed method, inserted watermarks were extracted from watermarked frames by applying different attacks on it. Evaluation of the method is also done by comparing PSNR, SSIM and BER against state-of the-art. The results showed that our method shows better results than them.

REFERENCES

1. Makbol, N.M., Khoo, B.E., Rassem, T.H., 2016, "Block-based discrete wavelet transform-singular value decomposition image watermarking scheme using human visual system characteristics", IET Image Process., 10(1), pp. 34–52.
2. Available:http://ieeexplore.ieee.org/stamp/stamp.jsp?tp=&arnumber=7361049&isnumber=7361044
3. Bao, P., Ma, X.(Jan 2005), "Image adaptive watermarking using wavelet domain singular value decomposition", *IEEE Trans. Circuits Syst. Video Technol.*, 1**5(1)**, pp. 96–102.
4. Available:http://ieeexplore.ieee.org/stamp/stamp.jsp?tp=&arnumber=1377363&isnumber=30064
5. Makbol, N.M., Khoo, B.E.(Feb 2013), "Robust blind image watermarking scheme based on redundant discrete wavelet transform and singular value decomposition", *AEU-Int. J. Electron. Commun.*, **67(2)**, pp. 102–112.
6. Available: https://doi.org/10.1016/j.aeue.2012.06.008.
7. Mehta, R., Rajpal, N., Vishwakarma (Apr 2016), V.P., "LWT-QR decomposition based robust and efficient image watermarking scheme using Lagrangian SVR", *Multimedia Tools Appl.*,**75(**7), pp. 4129–4150.
8. Available: https://doi.org/10.1007/s11042-015-3084-5.
9. Muhammad, N., Bibi, N.(2015), "Digital image watermarking using partial pivoting lower and upper triangular decomposition into the wavelet domain", *IET Image Process.*,**9(**9), pp. 795–803.
10. Available:http://ieeexplore.ieee.org/stamp/stamp.jsp?tp=&arnumber=7224108&isnumber=7224061.
11. Ye, X., Chen, X., Deng, M.A, " SIFT-based DWT-SVD blind watermark method against geometrical attacks", 7th Int. Congress on IEEE Image and Signal Processing (CISP), Dalian, 2014, pp. 323–329.
12. Naderahmadian, Y., Hosseini-Khayat, S.: "Fast watermarking based on QR decomposition in wavelet domain". , 2010 Sixth Int. Conf. on Intelligent
13. Information Hiding and Multimedia Signal Processing (IIH-MSP) IEEE, Darmstadt, 2010, pp. 127–130.
14. Jane, O., Elbasi, E. (Aug 2014), "A new approach of nonblind watermarking methods based on DWT and SVD via LU decomposition", *Turk. J. Electr. Eng.Comput. Sci.*, 22(5), pp. 1354–1366.
15. Available:https://pdfs.semanticscholar.org/7eb3/07b8babea3632b164bca8e4e51f2a3af6caf.pdf
16. 9. Aslantas, V., Dogan, A.L., Ozturk, S., "DWT-SVD based image watermarking using particle swarm optimizer", 2008 IEEE Int. Conf. on IEEE Multimedia and Expo, Hannover, 2008, pp. 241–244.
17. 10. Tsai, H.H., Jhuang, Y.J., Lai, Y.S.(Aug 2012), "An SVD-based image watermarking in wavelet domain using SVR and PSO", Appl. Soft Comput., 12 (8), pp.2442–2453.
18. Available: https://doi.org/10.1016/j.asoc.2012.02.021.
19. 11. Jahan, R.(Oct 2013), "Efficient and secure digital image watermarking scheme using DWT-SVD and optimized genetic algorithm based chaotic encryption", Int. J.Sci. Eng. Technol. Res. (IJSETR), 2 (10), pp. 1943–1946.
20. Available:https://pdfs.semanticscholar.org/704b/0fbd1822ad2944467b3b36526c5af1b0d8b4.pdf
21. 12. Ali, M., Ahn, C.W., Pant, M., Siarry P (Apr 2015), "An image watermarking scheme in wavelet domain with optimized compensation of singular value decomposition via artificial bee colony", Inf. Sci., 301, pp. 44–60.
22. Available: https://doi.org/10.1016/j.ins.2014.12.042.
23. 13. Ansari, I.A., Pant, M., Ahn, C.W.(Mar 2016), "Robust and false positive free watermarking in IWT domain using SVD and ABC", Eng. Appl. Artif. Intell, 49, pp. 114–125.
24. Available: https://doi.org/10.1016/j.engappai.2015.12.004.
25. 14.Ali, M., Ahn, C.W., Pant, M.(Jan 2014), "A robust image watermarking technique using SVD and differential evolution in DCT domain", *Optik-Int. J. Light Electron Opt.*, **125** (1), pp. 428–434.
26. Available: https://doi.org/10.1016/j.ijleo.2013.06.082.
27. 15. Ali, M., Ahn, C.W., Siarry, P.(May 2014), "Differential evolution algorithm for the selection of optimal scaling factors in image watermarking", *Eng. Appl. Artif. Intell.*, **31**, pp. 15–26.
28. Availble: https://doi.org/10.1016/j.engappai.2013.07.009.
29. 16. Loukhaoukha, K.(Jun 2013), "Image watermarking algorithm based on multi objective ant colony optimization and singular value decomposition in wavelet domain", J. Optimization, doi. 10.1155/2013/921270.
30. 17. Y. Guo, B. Li and N. Goel(Jun 2017), "Optimised blind image watermarking method based on firefly algorithm in DWT-QR transform domain," in *IET Image Processing*, 11(6), pp. 406-415, 2017.
31. Available: http://ieeexplore.ieee.org/stamp/stamp.jsp?tp=&arnumber=7947375&isnumber=7947374.
32. 18. X.-S. Yang and S. Deb, "Cuckoo search via Lévy flights", World Congress on Nature and Biologically Inspired Computing, Coimbatore, IEEE Press, Piscataway (2009), pp.210–214.
33. 19. Y. W. Zhang, L. Wang and Q. D. Wu (Apr 2014) , " Dynamic adaptation cuckoo search algorithm", Control Decision , 29(4), pp.617–622.
34. 20.G. Kanagaraj, S. G. Ponnambalam and N. Jawahar (Dec 2013), "A hybrid cuckoo search and genetic algorithm for reliability-redundancy allocation problems", Comput. Ind. Eng., 66(4), pp.1115–1124.
35. Available: https://doi.org/10.1016/j.cie.2013.08.003.
36. 21. S.L. Hsieh, J.J. Jian, I.J. Tsai, and B.Y. Huang, "A color image watermarking scheme based on secret sharing and wavelet transform", In: Proc. of IEEE International Conf. on Systems Man and Cybernetics, Montreal, Que., Canada, 2007, pp. 2143-2148.

37. 22. Papakostas, G.A., Tsougenis, E.D., Koulouriotis, D.E.(Jan 2014): "Moment-based local image watermarking via genetic optimization", *Appl. Math. Comput.*, **227**, pp. 222–236.
38. Availble: https://doi.org/10.1016/j.amc.2013.11.036.
39. 23. Anjaneyulu Sake, Ramash Tirumala,"Bi-orthogonal Wavelet Transform Based Video Watermarking Using Optimization Techniques", 2nd International Conference on Solar Energy Photovoltaic, Ongole, Science direct, 2016,5(1), pp.1470-1477.
40. 24. Dolley Shukla, Manisha Sharma(Mar 2018), "Robust Scene-Based Digital Video Watermarking Scheme Using Level-3 DWT: Approach, Evaluation, and Experimentation ", Radio electronics and Communications Systems, 61(1), pp.1-12.
41. Available: https://doi.org/10.3103/S0735272718010016.
42. 25. S. Kadu, C. Naveen, V. R. Satpute and A. G. Keskar, "Discrete wavelet transform based video watermarking technique," 2016 International Conference on Microelectronics, Computing and Communications (Micro Com), Durgapur, 2016, pp. 1-6.

AUTHORS PROFILE

Bhargavi Latha S, Assistant Professor in Computer Science and Engineering Department at GRIET, Hyderabad, Telangana is presently engaged in pursuing her Ph.D. in Image Processing registered with JNTU, Hyderabad. Prior to Ph.D., she had earned Masters of Technology in Computer Science and Engineering in JNTUH, Hyderabad and Bachelors of Technology in Electronics and Communication and Engineering at JNTU. She has 12 Years of experience in teaching. Her areas of interest include Image Processing, Internet of Things and Network Security. She has published eight research articles in leading journals and conference proceedings in the area of image watermarking and Video watermarking.

Dr D. Venkata Reddy received B.Tech (ECE), M.Tech (ECE) and Ph.D degrees in Electronics and Communications from JNTUH. Presently he is serving as a Professor in Electronics and Communications Engineering and In-charge for campus placements in Mahatma Gandhi Institute of Technology, Hyderabad. His research interests include multivalued logic, Digital Design, Digital Signal Processing, Image processing. He has published more than 25 research articles in leading journals and conference proceedings in the area of Digital Design, Digital Signal Processing, image and Video watermarking. He is a member of IEEE Signal Processing Society and Computer Society, member of IETE and member of ISTE.

Avula Damodaram received B.Tech(CSE),M.Tech(CSE) and Ph.D (CSE) degrees from Jawaharlal Nehru Technological University (JNTU) Telangana. He has been serving JNTU since 1989 and he has performed distinguished services for the University, as a Professor, Head of the Department, Vice Principal, Director of UGC-Academic Staff College, Director School of Continuing & Distance Education, Director, University Academic Audit Cell, and Director, Academic & Planning. He Worked as a Professor and Vice Chancellor in Sri Venkateshwara University, Tirupati (Andhra Prahesh). His research interests include Image Processing, Pattern Recognition, Network Security, Steganography and Digital Watermarking. He is a life member of various professional bodies.