International Journal of Innovative Technology and Exploring Engineering (IJITEE)
ISSN: 2278-3075 (Online), Volume-8 Issue-11, September 2019

Smart Garbage Monitoring and Navigation System using IoT

Velmurugan T, Prakasam P, Noor Mohammed V, Saravanan K

Abstract*: *In city areas where people are more, managing garbage is in an inappropriate way leading to multiplying of germs that can cause illness. There is a difference in how frequently they use these litter bins in various regions. Periodic checking with timing gaps does not help. They may overflow at times even earlier than expected. To avoid this and to enhance the cleaning, a smart garbage monitoring method to find when the garbage can is full is proposed in this paper. The method's design gathers such information as well as transmits it via a network of wireless type. In this proposed method, sensing of the dustbin's trash level is done by sensors as well as information is transmitted to the official mobile station via GSM and GPS module. Online monitoring of the garbage level at control room is made using a WiFi Module. Arduino processor interfaces the system of sensors with the network modules. This data helps contracted cleaners as well as those who provide garbage cans, promptly empty to maintain the area spick and span..

Keywords* : *Smart Dustbin, Microcontroller, Ultrasonic Sensor, GSM, GPS, WiFi Module, Cloud server

I. INTRODUCTION

Collecting and disposing of trash is a prime service rendered by the city to the residential community. In the budget managing garbage, nearly 85% expenditure goes to collecting as well as transportation. It is because of lack of proper management solution [1]. The task of collecting as well as transferring is to be supervised by personnel in the city. Good maintenance is required to do periodic disposal of accumulated garbage [2]. One can find that infrequent clearing of solid waste from trash cans occupies littering the neighboring area. In the present days, the method for collection of solid wastes must be improved; a real-time monitoring of filled up positions of dustbins is needed. This exposition proposes a continuous online monitoring system of dustbins on cloud server which will save fuel and time by avoiding routine check. Also, the exact location of the filled dustbins and the shortest navigation route provided by GPS makes the entire process more effective and convenient.

Manuscript published on 30 September 2019.
*****Correspondence Author(s)
Velmurugan T, School Electronics Engineering, Vellore Institute of Technology, Vellore, TN, India.. Email: tvelmurugan@vit.ac.in
Prakasam P, School Electronics Engineering, Vellore Institute of Technology,Vellore, TN, India. Email: prakasamp@gmail.com
Noor Mohammed V, School Electronics Engineering, Vellore Institute of Technology, Vellore, TN, India. Email: noorb4u@gmail.com
Saravanan K, School Electronics Engineering, Vellore Institute of Technology, Vellore, TN, India. Email: kasisaravanan@vit.ac.in

The basic idea of using smart dustbin has been derived from a survey report [3] where all possible opportunities of waste management using the Internet of Things can be implemented in smart cities. It discusses most of the IoT Technologies like RFIDs, Sensors, Actuators, GPS etc which can be used for smart garbage management. There have been many research works related to waste management and monitoring. To monitor the filled-up position of a trash can, a person in pursuit of research resorts to a network of sensors of wireless type [4] which does not provide any location information. A researcher [5] generated a Graphical User Interface (GUI) for displaying various parameters as well as info about collecting trash. It includes trash can's status, its location, trash collected time as well as the date. But the sensor used is Infrared Sensor which is less reliable in sensing the garbage level because the movement of any object or hand could be sensed as a level at that position.

Similar work has been done in a paper [6] in which the real-time status of a network of dustbin is monitored and maintained in a database. It uses Zigbee and GSM/GPRS connectivity for communication. But the limitation is that it does not provide any alert notification and navigation route when dustbin gets filled. In [7] authors considered a network of sensors of wireless type for monitoring the filled up position of a dustbin. They utilized motes of Argos which cover an area of nearly 430m. A simple GSM based waste overflow indicator has been implemented in a paper [8] which is just a basic part of the entire waste management and monitoring. In [9] some analysis have been carried out checking trash cans on real-time; it was limited by particular shortcomings. The communicating units of GSM/GPRS were employed by these authors doing research to gather info related to waste-cans and sent to the server. It is inclusive of connectivity of GSM/GPRS to every waste-can, but operating the cost was more.

Vikrant et. al [10] have implemented a management unit calling it as smart garbage by using the microcontroller Atmel328 as well as sensors of IR to sense the level of trash being filled up. C. Alcaraz et. al [11] did think on the different schemes of varied type by integration with the Internet of Things containing a network of wireless type with sensors. In [12] the authors have discussed about implementing smart garbage-can to be utilized for smart cities. Traffic, monitoring system using Linux and android has been reported in [13]. The past literary study narrated so far here infers that in order to maintain the garbage waste in an effective manner, technology-based automatic system is essential.

II. Materials and Methods

In this paper, the sensors of ultrasonic type sense the level of garbage being filled up in the waste-bins. The Arduino is Programed so that when the level reaches a specific mark sensing info is dispatched prompting to empty it. The same is illustrated in Fig. 1. Real-time online monitored garbage condition of collecting status is under effective observation on the cloud server.

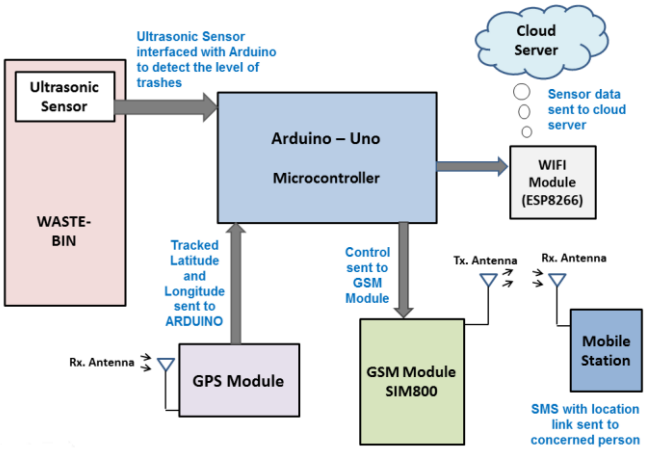

Fig. 1. Block diagram of garbage monitoring System

A. Ultrasonic Sensor

Fig. 2. Ultrasonic Sensor- HC-SR04

An Ultrasonic sensor utilizes sonic waves in measuring remoteness of the target. The remoteness is gauged by a sonic wave sent with a particular frequency; tracing is by way of its return by bouncing back. The recorded elapsing period between the sonic wave sent as well as its bouncing back, the distance between the sonar sensor and the object is calculated. The ultrasonic module used in this research work is HC - SR04 provides a 2cm - 400cm non-contact measurement and is illustrated in Fig. 2.

B. Microcontroller

Arduino Uno- The Arduino/Genuino Uno is a microcontroller centered on the ATmega328P. This contains 14 pins of digital input or output; 6 of them find use as PWM (Pulse Width Modulation) outputs, 6 analog inputs, a 16 MHz Xtal of quartz, one connector of USB, a power jack, one header of ICSP (In-Circuit Serial Programming) as well as a button to reset.

C. GSM Module

SIM 800- GSM Modem has built-in quad-band GSM engine, as well as working frequencies are 850/ 900/ 1800/ 1900 MHz. SIM800 GSM modules (shown in Fig. 3) contain a built-in stack of Bluetooth in compliance with 3.0+EDR & supported by FM radio. Accessibility of interface is by utilizing commands of AT. The Modem has an interface of RS232. It is helping in connecting microcontroller with PC.

Fig. 3. GSM Module- SIM800

The baud rate is getting configured from 9600-115200 by way of AT commands of (Attention). It suits SMS, Voice and application of Data transfer in the interface of M2M (Mobile to Mobile). To communicate ZigBee too may e employed in the part of the transmitter. ZigBee being networking wireless component meant for remote control and sensor applications and is required for operations involving a wireless transfer of data over Personal Area Network in any locations that are isolated. ZigBee has a shortcoming; its range being small, less complex, as well as the data rate is low. Obviously, GSM has an edge over ZigBee in communicating schemes.

D. GPS Module

Fig. 4. GPS module-GY-NEO6MV2

The GPS module used in this research work is NEO6MV2 board is shown in Fig. 4, which features the u-blox NEO-6M GPS with antenna and built-in EEPROM. It only receives signals from GPS satellites and gives the latitude and longitude of the location where its antenna is placed.

E. WiFi Module

Fig. 5. WiFi Module- ESP8266

Figure 5 illustrate the WiFi module- ESP8266, that gives any microcontroller access to a WiFi network. It can both host an application as well as do offloading of every WiFi functions of networking from any other application processor. This module has strong processing as well as storing capability. It permits for integrating it to the sensors as well as other devices of a specific application by way of its GPIOs with a minimum loading during runtime.

Retrieval Number: K21690981119/19©BEIESP
DOI: 10.35940/ijitee.K2169.0981119
Journal Website: www.ijitee.org

Published By:
Blue Eyes Intelligence Engineering
and Sciences Publication (BEIESP)

The programing of the module may be done by an Arduino/USB to TTL converter by way of the pins of serial type (Rx, Tx).

F. Ardunio Software

Arduino is an Integrated Development Environment (IDE) of cross-platform. It is working jointly with an Arduino controller so that write, then compile as well as uploading code into the board is possible. The software providing back up for a wider range of boards of Arduino It includes Arduino Uno, Esplora, Mega, Ethernet, Pro or even Pro Mini Fio and LilyPad Arduino. The languages for programming used for the Arduino are C as well as C++. The aspects like automatic indentation, syntax highlighting,
As well brace matching enables that as an alternative which is modern for the other IDEs.

III. IMPLEMENTATION

In the proposed system, the Ultrasonic sensor placed on top of the dustbin detects the garbage level by triggering a high pulse or sending a ping from the TRIG pin of the sensor. When the pin TRIG becomes HIGH followed by LOW (for a time duration that is not less than 10µs) the clock internally available starts ticking. Audio of 40 kHz for 8 cycles is being sent out from its transmitter. Then it will start counting the time taken for the signal to strike and revert to get echo received at the ECHO pin. Thus the elapsed time is recorded and the distance of the object is calculated as distance = (speed of sound in air x elapsed time)/2, where the speed of sound in air is 340m/s or 29cm/ µs.

The Arduino UNO board is used to control the sensor along with GSM, GPS and Wifi Modules. The use of Wifi-Module ESP8266 enables us to continuously send sensor data processed by Arduino to a cloud server over a hotspot. The required data is sent every 15 seconds to Thingspeak Cloud server. This helps in continuous online monitoring of the dustbin status.

Global Positioning System (GPS) module which basically has a receiver antenna computes its position based on the information it receives from the GPS satellites [15]. The GPS module sends the real-time tracking position data in the form of latitude and longitude values to Arduino microcontroller.

Also, there are LED indications on dustbins for the people to know how much the bin is filled. If there is more than 70% of space green light would be ON. In case of about half-filled bins (say 25% to 70% of empty space available) a yellow light would be glowing and when the threshold level is reached a red light would glow.

The moment garbage level reaches the threshold mark, the microcontroller sends the control to GSM Module which sends a text message giving an alert to the mobile client to clean up the dustbin. In the SMS, a link is also sent which directs the user to Google Maps in which he can exactly know the dustbin location tracked by GPS module and follow the shortest navigation route to reach the dustbin from his present location. The basic steps involved in trash monitoring and getting the location access of dustbin is depicted using the following flowchart in Fig.6.

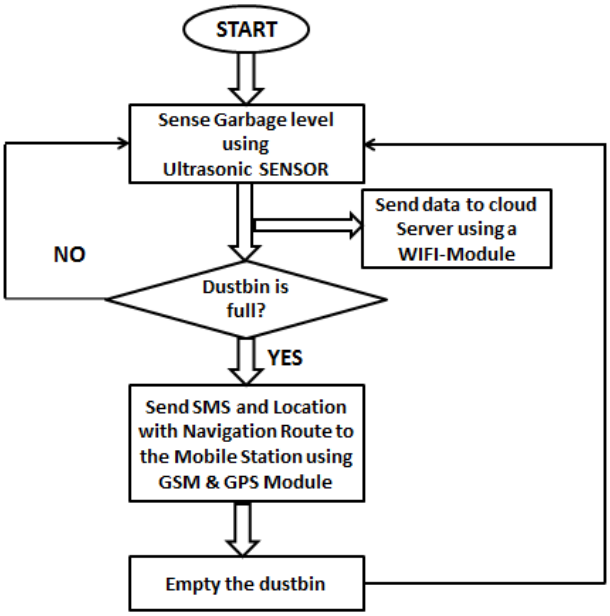

Fig. 6. Flowchart of garbage monitoring system

IV. RESULTS AND DISCUSSION

The proposed system has been deployed in the natural field and it has been tested as per the testing procedure described in section III. The results obtained are discussed in the following section.

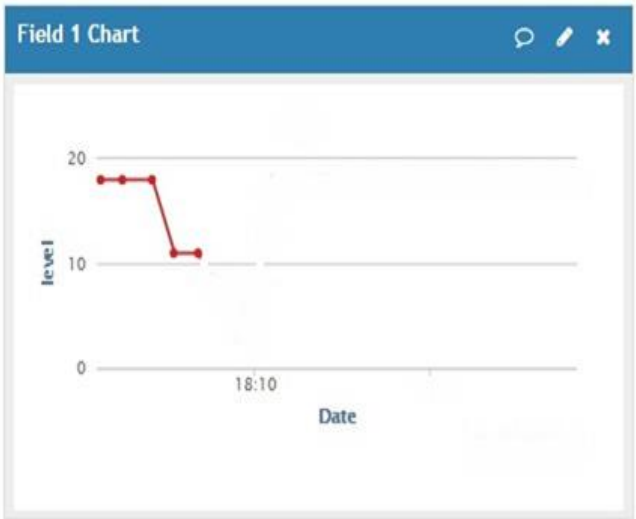

Fig. 7 Dustbin status monitor on cloud server

The real-time observation has been monitored by the dedicated cloud server and the results recorded is shown in Fig. 7. Initially, without dumping the garbage, the height of the bin is measured using ultrasonic sensor and it is recorded as 18 cm. As the wastes were dumped in the bin, hence the height of the bin is reduced to 12cm. This will give the clear understating of the amount of wastes dumped in the bin, if the diameter is known.

The GPS module located in the dust bin to provide the required latitude and longitude values to the respective monitoring authority to know which bin gets overloaded. The same is shown in Fig. 8.

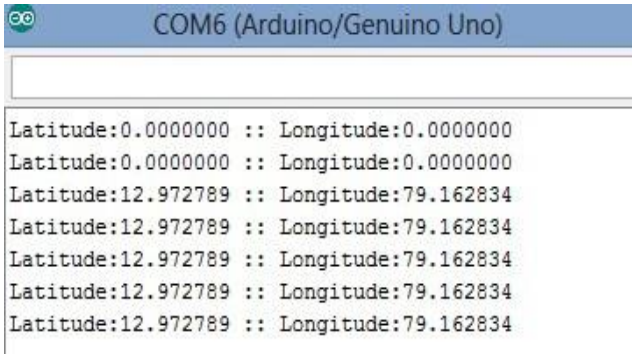

Fig. 8. Location information of the dustbin

When the threshold level of 4 cm (<25%) has reached in

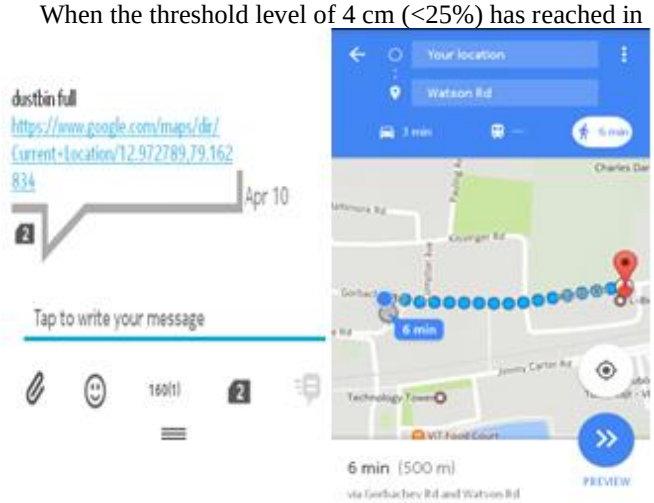

Fig 9 SMS alert on mobile phone navigation route

a bin, an alert message with the location link for navigation has been sent through GSM module and the same has been received on a mobile phone. This is illustrated in Fig, 9.

Once the alert message received to the mobile of the monitoring authority, that particular bin has been cleaned immediately and then the recording system shows the initial value. i.e 18 cm. Since all these data are stored in the cloud server, the monitoring authority can view the effectiveness of this IoT based garbage and waste monitoring system. The same field chart is shown in Fig. 10.

V. Conclusion

An IoT based advanced system is devised for the proper monitoring of the garbage. An infrastructure for monitoring trash can system in a rea- time is explained which utilizes ultrasonic sensing as well as technologies of communication with IoT. The garbage from residential areas accumulates much as days pass by. So it is important that collection and disposal of wastes from dustbins should be on time in order to avoid environmental pollution.

Fig 10 Dustbin status when emptied after getting fully filled

The provision of online monitoring of dustbin status with an alert when dustbins get filled and the navigation route to reach the dustbin location would be extremely helpful for the municipality that locally administer and manage garbage with less human intervention. The method in proposal tries to better the present method in gathering garbage in India and would play a crucial role in "Clean India Mission".

VI Future Enhancements

There is always a scope of improvement by using more efficient and advanced technologies. Some of the future works which can be done on the proposed system to make it more automated are as follows:

1) Automatic lock of bins which would avoid overflow of the garbage when they get filled.
2) Improving the graphical user interface for the server.
3) Building applications for smartphones so that bin monitoring and management could be done at fingertips.

References

1. N. V. Karadimas, K. Papatzelou, and V. G. Loumos, "Optimal solid waste collection routes identified by the ant colony system algorithm," *Waste management and research*, vol. 25, no. 2, Apr 2007, pp. 139-147.
2. Flora A. "Towards a clean environment: A proposal on sustainable and integrated solid waste management system for universiti Kebangsaan Malaysia". Report from Alam Flora. 2009.
3. Anagnostopoulos,T., Zaslavsky,A., Kolomvatsos, K., Medvedev,A., Amirian,P., Morley,J., & Hadjiefthymiades,S. "Challenges and Opportunities of Waste Management in IoT-enabled Smart Cities: A Survey", *IEEE Trans. Sustain. Comput..* , vol.2, no. 3, Apr. 2017,pp. 275-289.
4. S. Longhi et al., "Solid Waste Management Architecture Using Wireless Sensor Network Technology" *In Proc. of 5th IEEE International Conference on New Technologies, Mobility and Security (NTMS)*, May. 2012, pp. 1-5.
5. Bhor,V., Morajkar,P., Gurav,M., Pandya,D., & Deshpande,A, "Smart Garbage Management System", *International Journal of Engineering Research & Technology*, vol. 4, no. 3, March. 2015, pp. 1117-1120.
6. Al Mamun M.A., Hannan M.A., and Hussain A., "Real time solid waste bin monitoring system framework using wireless sensor network", *In proc. of the IEEE International Conference on Electronics, Information and Communications (ICEIC 2014)*, SEP. 2014, pp. 01-02.

7. Ishwarya C, Jayashree S,Yesodha, "GSM based Garbage and Waste Collection bins overflow indicator", *International Journal of Advance Research and Innovative Ideas in Education*, vol. 03, no. 02, APR. 2017,pp. 2235-2240.
8. M. A. A. Mamun, M. A. Hannan, A. Hussain and H. Basri King, B. Zhu, and S. Tang, "Real time bin status monitoring for solid waste collection route optimization", *In proc. of 5th IEEE Brunei International Conference on Engineering and Technology*, NOV. 2014,pp. 01-06.
9. M. Faccio, A. Persona, and G. Zanin, "Waste collection multi objective model with real time traceability data," *Waste Management*, vol. 31, no. 12, DEC. 2011,pp. 2391-2405..
10. Vikrant Bhor, Pankaj Morajkar, Amol Deshpande, "Smart Garbage Management System", *International Journal of Engineering Research & Technology (IJERT)*, vol. 4, no. 3, MAR. 2015, pp. 1117-1120.
11. C. Alcaraz, P. Najera, J. Lopez, and R. Roman, "Wireless Sensor Networks and the Internet of Things: Do We Need a Complete Integration?", *In proc. of Ist International Workshop on the Security of the Internet of Things (SecIoT10)*, DEC. 2010.
12. Narayan Sharma, Nirman Singha, Tanmoy Dutta, "Smart Bin Implementation for Smart Cities", *International Journal of Scientific & Engineering Research*, vol. 6, no. 9, SEP. 2015,pp. 787-791.
13. Prashant A. Shinde, Y. B. Mane, Pandurang H. Tarange, "Real time vehicle monitoring and tracking system based on embedded Linux board and android application", *In proc. of IEEE International Conference on Circuit Power and Computing Technologies (ICCPCT)*, JULY. 2015, pp.01-07.

AUTHORS PROFILE

T. Velmurugan received his B.E. Degree in Electronics and Communication Engineering in 2000, M.Tech. in advanced communication systems from SASTRA University, Thanjavur India in 2002 and Ph.D. from VIT University, Vellore, India. He is currently serving as a Faculty in the School of Electronics Engineering, Vellore Institute of Technology, Vellore. He has published several papers in reputed national/international journals. His research interest includes Handoff in Wireless Networks, Cognitive Radio Networks and IoT.

Prakasam. P has obtained his B.E degree in Electronics and Communication Engineering from Madras University in 1994. He received his M.Tech degree in Advanced Communication Systems from SASTRA University, Tanjore, India in 2002. He obtained his Ph.D from Anna University Chennai, India. At present he is a Professor, School of Electronics Engineering at Vellore Institute of Technology, Vellore. He has authored over one hundred and ten research publications in international and national journals and conferences. His special areas of interest are Signal Processing, Wireless Networks, Communication Systems and Applications of signal processing in Mobile Communication Systems. He is an Associate Editor in IEEE Access and also an editor-in-chief of Journal of Signal Processing and Wireless Networks. Prakasam. P is a Senior Member of IEEE (USA), life member of ISTE, IACSIT, IAENG and VSI (India).

Noor Mohammed. V received his B.E., Degree in Electronics and Communication Engineering from Madras University, Tamil Nadu, India, in 1999 and the M.E., Degree in Communication Systems from Madurai Kamarj University, Tamil Nadu, India in 2003. He received his Ph.D in Wireless Communication and Networking from Vellore Institute of Technology (VIT), Vellore, Tamil Nadu, India. Currently he is Associate Professor in School of Electronics Engineering, Vellore Institute of Technology, Vellore, Tamil Nadu India. He is a member in IEEE and life member in ISTE. His research interests include Wireless Communication, Advanced Wireless Networks, Massive MIMO and Green Communication.

K.Saravanan received M.Tech Degree in Electronics and Communication Engineering from Pondicherry Engineering College and Ph.D. from Anna University, School of Electronics Engineering, Vellore Institute of Technology, Vellore. He published more than 12 papers in various National and International journals. His research interests are Mobile Adhoc Networks and Network Security.