Chirp Signal Generator Based on Direct Digitalsynthesizer (Dds) for A Radar At 300 Ghz

Nagaraja Kumar Pateti, Navitha Pateti

Abstract*— In the Modern day electronic fighting Systems the utilization of range has been broadened with a proficient way which makes the recognizable proof of the signal difficult. Modern radars use recurrence and stage tweaked signs to spread their range to enhance the handling gain. The way toward finding the balance arrangement of a perceived signal, the moderate development between signal distinguishing proof and demodulation, is an imperative task of a wise recipient, with various customary resident and military applications. Obviously, with no learning of the transmitted data and various cloud parameters at the authority, for instance, the signal control, carrier repeat and stage offsets, data, and so on., daze distinguishing proof of the adjustment is a troublesome assignment. This turns out to be considerably additionally difficult in certifiable situations. Wideband direct recurrence tweaked (LFM) signal is generally utilized in exact separation estimating radar framework. As customary techniques for creating LFM signal have a great deal of detriments, for example, shakiness and nonlinearity we propose an alternate answer for wideband LFM signal generator in L-band dependent on DDS and recurrence augmentation. The proposed strategy creates the baseband LFM signal utilizing the DDS, and after that includes the baseband motion into the recurrence duplication framework; last we can accomplish an unadulterated L-band wideband LFM signal. The estimation result demonstrates that the proposed can satisfy every prerequisite of anticipant palatably.

***Keywords*—Radars, Chirp signals, ADC, LFM, CNN, LWRT, Signal Recognizable proof**

I. INTRODUCTION

Modern radars use recurrence modulated signals and stage modulated signals to spread their range to improve the preparing gain. There are a few methodologies of utilizing the stage adjustment. The stage change can be π, π/2, π/4, etc. At the point when the stage change is π, it is alluded to as biphase move keying (BPSK). Correspondence signals utilize different sorts of stage balances this paper is mostly for LFM Twitter since it is increasingly mainstream in radar applications. It is imperative to recognize the presence of a LFM Trill signal for an electronic fighting (EW) receiver. The identification of a LFM Peep signal can help recognize the radar type, which is significant data. On the off chance that more data can be acquired from the signal, the recognizable proof methodology can be simpler. In this investigation the necessities are to recognize the presence of a Trill signal and discover the recurrence and its tweet rate. The chip time is the quick pace of progress of the recurrence. Direct recurrence modulated (LFM) signal is broadly utilized in radar for its great range goals and bigger outflow vitality. The investigation of the enormous data transfer capacity LFM signal age innovation is of extraordinary noteworthiness for high goals radar, for example, manufactured opening radar and opposite engineered gap radar. So far, there are lots of mature methods to generate the LFM signal such as the passive methods which generally use the SAW devices and the active methods of which the VCO is a key device. Generally, the generation of wideband LFM signals needs a high linearity and high frequency stability. Neither the passive nor the active methods are capable of achieving the design goal. With the advancement of computerized innovation, advanced innovation to produce wideband LFM signal is possible. There are two main digital approaches to produce the LFM signal: digital baseband generation with a combination of multiplier chain to extend the bandwidth and the use of CDDS (Chirp Digital Direct Synthesizer) devices. CDDS is able to work at the frequency of 1GHz, for example, the STANFORD TELECOM devices can produce a LFM signal with a bandwidth of 400 MHz, and has very high frequency modulation linearity, frequency stability, spectral purity and low spurious level. But the inevitable pre-distortion compensation is more difficult, and this shortcoming of CDDS devices is fatal to radar systems.

Adopting digital baseband generation with a combination of the multiplier chain to design the wideband LFM signal has a great deal of benefits such as activity and high reliability. In our design, we use this proposed method to achieve an L-band wideband LFM signal which has a bandwidth of 510MHz. In this system, three key technologies are implemented: large bandwidth digital baseband signal generation technology, broadband double YRS design technology and efficient broadband filter technology. In our design, Firstly, we produce a 178~243.75MHz baseband LFM signal using DDS. Secondly, add this baseband LFM signal into a frequency multiplication system which consists of groups of frequency doublers, amplifiers and filters. Lastly we can achieve the expected wideband LFM signal.

II. DIGITAL RECEIVER

Radio receivers that play out the analog-to-digital transformation procedure near the reception apparatus and do a large portion of the signal preparing in the digital area are known as digital receivers. Digital receivers, frequently

Revised Manuscript Received on September 10, 2019.

Nagaraja Kumar Pateti, Assistant Professor, Department of ECE, CMR Institute of Technology, Hyderabad, Telangana, India.
(Email: nagaraja1609@gmail.com)
Navitha Pateti, Assistant Professor, Department of ECE, CMR Institute of Technology, Hyderabad, Telangana, India
(Email: navithapateti@gmail.com)

called programming radios, place a high execution trouble on the ADC, yet permit a decent arrangement of adaptability in post discovery signal handling. EW receiver parameters of intrigue incorporate affectability, dynamic range, goals, synchronous signal ability, unpredictability, and cost.

The square chart of a wideband digital EW receiver is demonstrated as follows. The info signal from the reception apparatus is first intensified by a wideband LNA. Most digital EW receivers use recurrence transformation before digitizing the signal. That is, the signal is first down changed over in recurrence, and after that digitized by an ADC. The digital signal is then prepared by a range analyzer that concentrates the recurrence data. Utilizing this recurrence data, the signal is arranged, and a parameter encoder then structures a heartbeat descriptor word (PDW). For LPI CW producers, the PDW contains the inside recurrence fc, the signal coding subtleties, for example, the regulation time frame and transfer speed (FMCW).

The upside of this methodology is that by driving the blender with a recurrence coordinated LO, the recurrence of the ideal signal or channel is changed over to a fixed recurrence. When changed over to a fixed On the off chance that, it very well may be handled by highly specific narrowband sifting (e.g., utilizing surface-acoustic wave gadgets or high-temperature superconductors). Too, all subsequent frequency

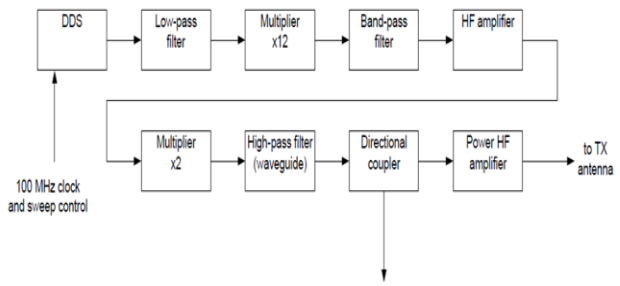

Figure 1 Signal Generation block diagram

Interpretations should be possible utilizing fixed-frequency LOs. Additionally performed is signal enhancement utilizing fixed increase LNAs (at RF), and variable addition intensifiers (at IF). The dissemination of increase over the IF stage forestalls dangers in the intensifiers, and lessens the opportunity of immersion.

An immediate transformation (homodyne) down change can likewise be utilized. This two-channel approach utilizes just a solitary nearby oscillator, and deciphers the signal important to zero frequency (zero-IF). Because of the end of the IF stages, all signal moulding must be performed either at RF or baseband. The immediate change approach offers a higher level of mix at the front end with less segments, enabling the greater part of them to be solidly created on a solitary chip. The immediate change receiver execution still does not coordinate the IF receiver, because of channel immersion and distortion brought about by the dc balances and self blending at the blender inputs. To exploit both receiver topologies, a low-IF receiver is presently an option (a couple of hundred kilohertz). The low-IF receiver has a high level of channel coordination, and is likewise obtuse toward dc counterbalances and LO-to-RF crosstalk. In all cases, the signal is down changed over to a baseband frequency that relies upon the analog-to-digital converter innovation that is available.

III. SIGNAL GENERATION SYSTEMDESIGN

DDS is another frequency combination strategy which begins from the idea of stage and legitimately blend waveforms required. The structure of DDS is shown in Fig. 1

IV. LINEAR RECURRENCE ADJUSTMENT

Frequency balance is a kind of regulation where the frequency of the bearer is differed as per the tweaking signal. The sufficiency of the bearer stays consistent. Since the sufficiency is kept steady, FM balance is a low-commotion process and gives a high quality balance strategy.

A peep is a signal wherein the frequency increments ('up-tweet') or diminishes ('down-twitter') with time. Tweet tweak, or straight frequency adjustment utilizes sinusoidal waveforms whose momentary frequency increments or diminishes directly after some time. These waveforms are regularly alluded to as direct peeps or essentially chirps. The rate at which the frequency changes is known as the twitter rate. In double twitter tweak, paired data is transmitted by mapping the bits into trills of inverse peep rates. For example, more than one piece period "1" is allotted a tweet with positive rate an and "0" a peep with negative rate −a. Peeps have been vigorously utilized in radar applications and therefore propelled hotspots for transmission and coordinated channels for reception of straight tweets are accessible. In a straight trill, the prompt frequency f(t) differs directly with time:

$f(t) = f_0 + k$

where f0 is the beginning frequency (at time t = 0), and k is the pace of frequency increment or trill rate. The relating time-area work for a sinusoidal straight trill is:

$$x(t) = \sin\left[2\pi \int_0^t f(t')\,dt'\right] = \sin\left[2\pi \int_0^t (f_0 + kt')\,dt'\right] = \sin\left[2\pi(f_0 + \frac{k}{2}t)t\right]$$

Classification of chirp signals:

a) UP Trill
b) DOWN Trill
c) UP-DOWN Trill

V. UP CHIRP

An Up twitter signal is a frequency modulated signal whose frequency increments directly as for time as demonstrated as follows

The up trill signal can be created utilizing the equation given below

x = sin(2*pi*((f0.*(n/Fs)) + ((k./2).*((n/Fs).^2))))

where k = (f1-f0)./t1

fo=Starting frequency

f1= ending frequency

t=time period

t1=end time

Fs=Sampling frequency.

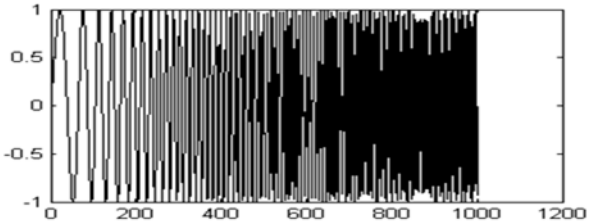

Figure 2 Up-chirp signal

VI. DOWN CHIRP

A Down twitter signal is a frequency modulated signal whose frequency diminishes directly concerning time as appeared in the figure below Figure 3 Down twitter signal

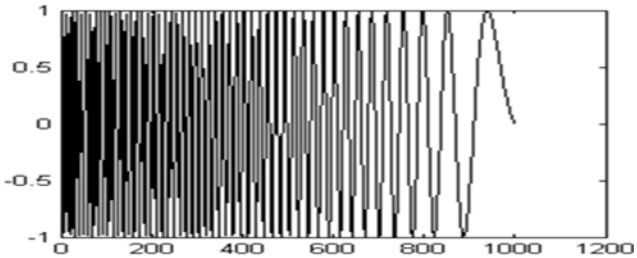

Figure 3: Down Chirp Signal

The Down trill signal can be generated using the formula given below

x = sin(2*pi*((f0.*(n/Fs)) + ((k./2).*((n/Fs).^2))))

where

k = (f1-f0)./t1 " chirp Rate"

f0=Starting frequency

f1= ending frequency

t=time

t1=end time

Fs=Sampling frequency

In the Down chirp signal the starting frequency is high and decreases linearly with respect to time

VII. UP-DOWN CHIRP

An up down trill signal is a combination of both up chirp signal and down trill signal. It is a frequency modulated signal whose frequency increases linearly with respect to time up to half of the time and decreases linearly from the half time to the end time is called as an up-down trill signal as shown in the figure below

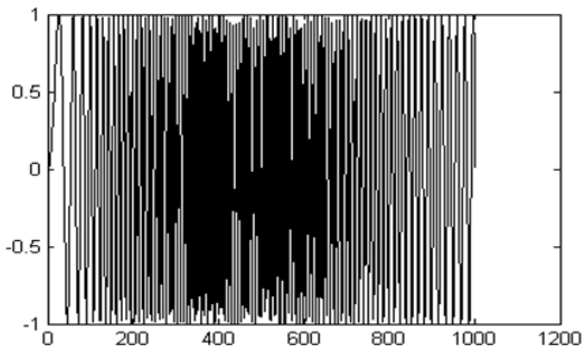

Figure 4: Up-Down Chirp Signal

The particular DDS working procedure is as per the following. While the clock heartbeat is trigging each time, accumulator drives the frequency control data and the yield data of stage register including, at that point the outcome is sent to the stage register. The new phase data generated by accumulator last clock is feed back to the accumulator info port, with the goal that viper keeps on including frequency control data under the activity of the following the clock. Along these lines, the stage accumulator under the activity of the reference check will be done for direct stage gathering with K as its progression. At the point when the stage after some time, it will create a flood, so as to finish an intermittent development, the cycle is a frequency cycle of DDS engineered signal, the stage accumulator flood frequency is the DDS yield signal frequency.

A. DDS-Based Signal Generation

As demonstrated in Area I, the center of CW-LFM radars is a DDS-based signal generation. In order to guarantee a high performance of the twitter sources, extraordinary consideration ought to be paid to the details of the DDS and its reference clock. Initial, a low-stage clamor reference clock is alluring to ensure the DDS stage commotion demonstrated by the maker. Then again, the misleading signals' substance at the DDS yield relies upon the inward digital-to-analog converter (DAC) quantization blunders and stage truncation and the reference-clock false signals.

To think about the business DDS accessible in the market, Table II demonstrates the broadband and narrowband DDS for peep signal age of the two fundamental DDS makers, Analog Gadgets and Euvis. The refinement among narrowband and broadband DDS is characterized by a transmission capacity point of confinement of 400 MHz. The low-pass recreation channel that is required for expelling the associated picture segments of the DAC sinc envelope reaction [23] is excluded in the assessment leading group of the exhibited broadband DDS in Table II. The DDSs utilized in the imaging radars of Table I are also included.

The two DDS-based signal age sources appeared in Fig. 1 are described below.

Tweet Source 1 (Broadband DDS): The trill source 1 square graph is appeared in Fig. 3(a). It depends on a chirpsignalwithabandwidthof500MHzgenerated

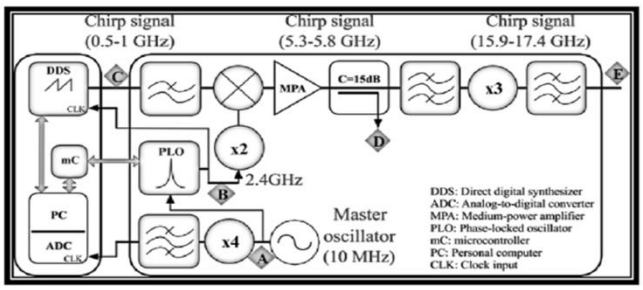

Figure 5: Up-Down Chirp Signal Source

In this wide band LFM generation system, we use the DDS to produce the baseband signal. First, we use a high stability crystal oscillator to get the 100MHz driving signal, and then after the processing of the comb filter the signal becomes a brand-new signal which has a comb-shaped spectrum. In order toachievethe1000MHzdrivingsignal(i.e. the tenth harmonic component) which is planned to be used

as the reference clock of the digital frequency synthesizer, a narrowband surface acoustic wave (SAW) filter is close placed after the comb filter to get the pure tenth harmonic signal.

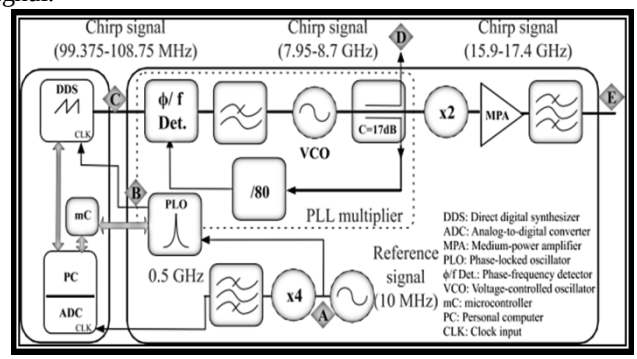

Figure 6: Down Chirp Signal Source

Through the20 times divider and coupler, we could get another pure100HMz signal which is used as a working clock of FPGA. FPGA transmits control data to the digital frequency synthesizer, and then the baseband LFM signal with a moderate bandwidth can be obtained through this digital frequency synthesizer.

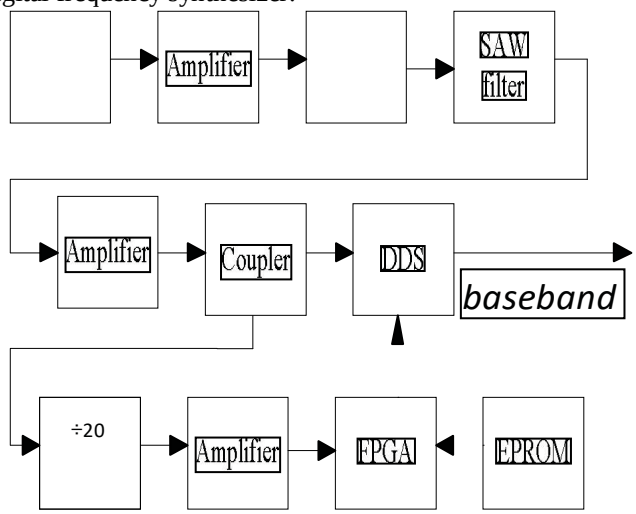

Figure 7: transmitter block diagram

It is worth mentioning that we can achieve the wideband LFM signal through stimulating the surface acoustic wave (SAW) dispersive delay line using the narrow pulse in L-band. This solution can offer a simple circuit and miniaturization, but it is rather difficult to achieve the high quality stimulating signal and amplifiers with high gain and low noise in L-band [9].

DDS is a new frequency synthesis technology with the characteristics of direct sampling of the reference clock, digitization and digital computing. The analog signal obtained from DDS has a short frequency switching time, high frequency resolution and the continuous output phase. What's more, all the design is digital and programmable. It is easy to integration and conducive to mass production. Nyquist sampling theorem shows the theoretical output frequency is 0MHz~500MHz,inorder to ensure effective separation of the two frequencies in the existence of mirror frequency, the DDS output

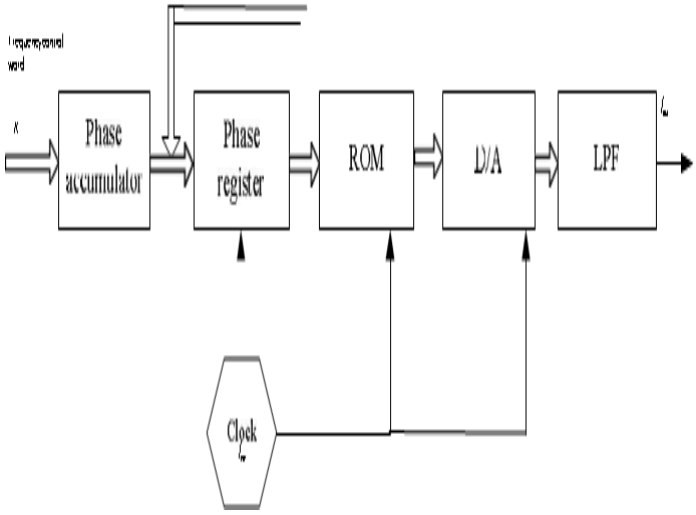

Figure 8: Digital Transmitter

frequency should be within the range of 0MHz~400MHz.Intheproposeddesign,theDDSoutputLFM signal is limited in178~243.75MHz.

After getting the baseband LFM signal through DDS, we can get the final L-band broadband LFM signal through the frequency multiplication system (see figure.3). Generally, orthogonal modulation and multiplication are two widely used approaches to get an L-band signal from a baseband one. In order to ensure the consistency of the I/Q channels, not only good consistency of the two DAC and low bandpass filters is necessary, but also for the DC suppression and harmonic suppression [10]. In practical applications, the entire precondition above is not easy to satisfy, so we adopt the frequency multiplication system to achieve the L-band LFM signal from the baseband signal.

The central frequency and bandwidth become 1687MHz and 518MHz respectively. Filters in this system directly affect the product; they are requisite for both the smooth passband and high inhibition in the stop band. The processed DDS signal is the stimulator of this system, when the signal is added in the doubler, the boundary frequency of the output signal is doubled, so the bandwidth of the output signal is twice as large as the foregoing stimulating signal.

VIII. RESULT AND ANALYSIS

According to the structure shown in Fig.2 and Fig.3, the actualized synthesizer framework was tried to assess the capability of the proposed arrangement. For the DDS function we use the special Analog Device AD9858 to provide the base- band LFM signal, which can be serially set to generate LFM signal. A 10bit DAC is integrated within the DDS.

The expected technical performances of this L-band LFM signal generator are as follows:

1) Centralfrequency:1687±4MHz:
2) 3dBbandwidth:"510MHz:
3) Outputpowerlevel:"15dBm:
4) Modulation slope: positive slope;
5) Flatnesswithincentralfrequency±200MHz:"3dB:

6) Spurioussuppression:“35dB:
7) Harmonicsuppression:“40dB;
8) Dispersive time: 2uS;

B.

ThesynthesizerismeasuredbyAgilentE4440Aspectrum analyzer, which could measure microwave signals up to 26.5GHz.

Figure.9 The spectrum of the output Chirp signal in L-band

From the measurement result shown in figure.4, we can see that the central frequency is fixed at 1687MHz, and 3dB bandwidth is more than 510MHz, this satisfies the expected technical performances perfectly.

The spurious and harmonic of the LFM signal in L-band are tested, from the measurement result (figure.5), we can see that both the spurious suppression and harmonic suppression are more than 50 dB. In DDS system, there are some spurious signals which are mainly close to the dominant frequency and unable to be processed by filters. As a result, the difference between the harmonic signal in DDS and the internal clock signal will produce the spurious. Generally, it is necessary plus a low pass filter (LPF) at the output of DDS to suppress the leak of the internal clock of and the main harmonic. Certainly, we can replace the LPF by a bandpass.

The flatness measurement result is shown in figure.6. From the testing result we can see that the desired flatness is achieved in the proposed design. In order to maintain the optimal performance in the SFDR and avoid potential damage to the DAC output circuit, the LFM signal produced by the DDSisregulatedfor-2dBm.Throughthematchingcircuitand the amplifying circuit, the power level can be magnified to 18dBm in the following processing. In the following amplification circuit, the amplifier is at the sub-saturated condition for the output signal in DDS is rather small. We can achieve a LFM signal with good flatness when using the LC filter of which 1.5dB bandwidth is 520MHz. the final LFM signal in L-band can be obtained after the processing of the limiting amplifier matching circuit.

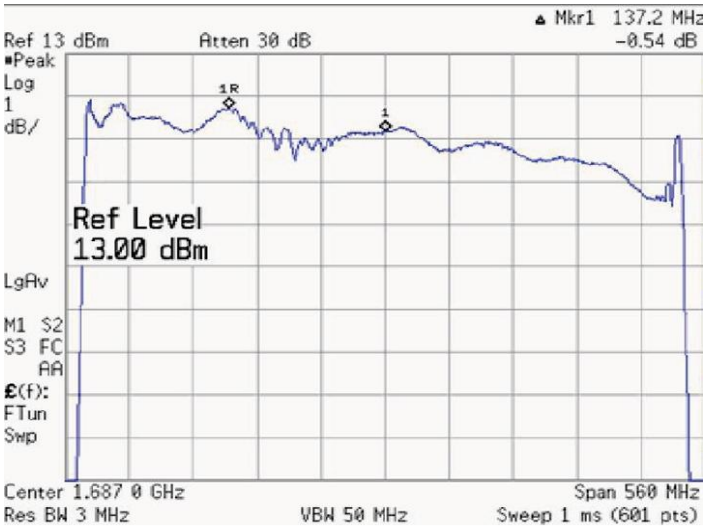

C. Figure.10The flatness measurement of the LFM signal

The bandwidth of the final LFM signal is 523MHz, and both the spurious suppression and harmonic suppressionaremorethan50dBwhiletheoutputsignalpower reaches19.7dBm.filter when high performance is in demand. In our frequency multiplication system, the LC filter is adopted to increase the suppression on the spurious and harmonic.

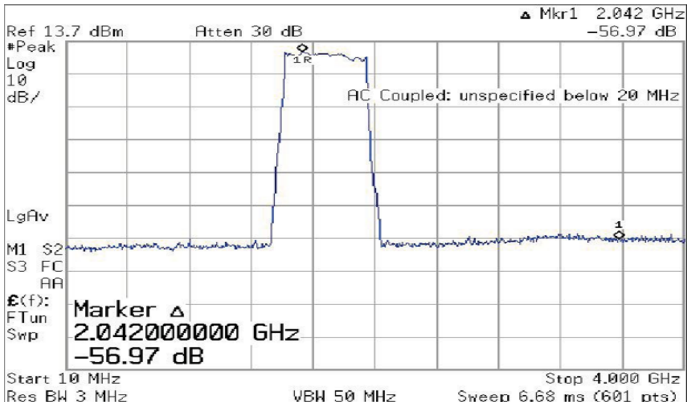

Figure.11 The spurious and harmonic of the Chirp signal in L-band

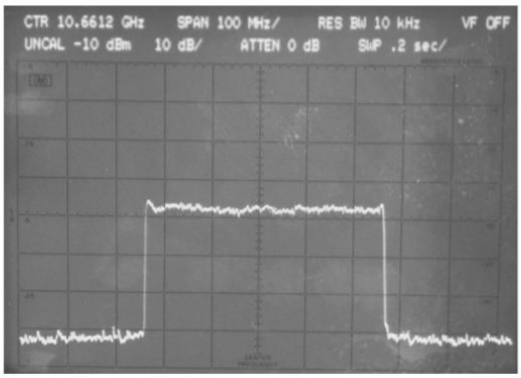

Figure.12Frequency spectrum of the signal generated

TABLE I

Parameter name	Unit	Test result		
Central frequency	MHz	1687.5	F1.. 1423MHz	F2..1952MHz
3dB bandwidth	MHz	523	F1.. 1426MHz	F2..1949MHz
Flatness within 200MHz	dB	2.0	P1.. 11.25dBm	P2..9.24dBm
Spurious suppression	dB	53	P3.. 10.21dBm	P4..-43.25dBm
Harmonic suppression	dB	53	P3.. 10.21dBm	P4..-43.25dBm
Output power	dBm	19.7	/	/

THE DETAILED TEST RESULT OF THE FINAL

IX. CONCLUSION

This paper depicts a calculation for the recognizable proof of LFM Peep signal which depends on the opportunity to recurrence examination for parameter extraction and after that convolution neural systems.

Two DDS-based models for CW-LFM signal age have been manufactured and tried for an imaging radar at 300 GHz. The introduced outcomes demonstrate that the two designs are fitting from the perspective of the radar execution (radar picture quality). Besides, the narrowband DDS/PLL engineering is a financially savvy arrangement both as far as expense and power utilization with a worthy SNR decrease as for the broadband DDS design. In this way, on parity of these figures of legitimacy, the narrowband DDS/PLL design is the most appropriate to the imaging radar necessities. This makes the narrowband DDS/PLL engineering moderate for imaging radar applications with the intend to build up a preindustrial prototype. Utilizing a progressively forceful technique dependent on the narrowband DDS/PLL design

The structured trill signal generator with direct combination of yield signal by means of recurrence increase is accessible way to create the highly cognizant radar signal for SAR purposes.

The above calculation is a proficient calculation, which is innovatively possible for the quick interference of signals with no parameter extraction (Heartbeat width, Heartbeat Reiteration Interim, bearing of landing). It outflanks the past methodologies as far as speed, affectability, exactness in the distinguishing proof of a LFM Peep signal

X. ACKNOWLEDGMENT

The fruitful finish of any errand would be deficient without the notice of the individuals who made it conceivable through their steady direction and support We might want to express our true thanks and profound feeling of appreciation towards Mrs. Ananya Mishra for her excellent direction, monitoring and steady consolation in research work. The introduction of this article could be a reality with the important specialized info agreed every once in a while.

The benefit of this methodology is that by driving the blender with a recurrence spry LO, the recurrence of the ideal signal or channel is changed over to a fixed recurrence. When changed over to a fixed In the event that, it tends to be prepared by highly specific narrowband sifting (e.g., utilizing surface-acoustic wave gadgets or high-temperature superconductors). Additionally, all subsequent frequency.

XI. REFERENCES

1. Avignon-Meseldzija E., Sylvain Wahl A., Dynamically Reconfigurable Frequency Synthesizer for Integrated FMCW Radar. International Radar conference, Lille, France, 2014.
2. Meta, A., Signal processing of FMCW synthetic aperture radar dat. Dissertation thesis, Delft University of Technology, Netherland, 2006, ISBN 907692810X.
3. Ash M., Ardeshir Tanha M., Brennan P., Kohler A., McElwaine J., Keylock Ch., Improving the Sensitivity and Phased Array Response of FMCW Radar for Imaging. International Radar conference, Lille, France, 2014.
4. M. Soumekh, Synthetic Aperture Radar Signal Processing with MATLAB Algorithm. New York: John Wiley & sons, 1999, ISBN 978-0-471-29706-2.
5. J. C. Curlander and R. N. McDonough, Synthetic Aperture Radar: Systems and SignalProcessing, Wiley-Interscience: Series in Remote Sensing, New York, 1991
6. M. Sheen, D. L. McMakin, T. E. Hall, and R. H. Severtsen, "Active millimeter-wave standoff and portal imaging techniques for personnel screening," in Proc. IEEE Conf. Technol. Homeland Secur. (HST),May 2009, pp. 440-447.
7. K. B. Cooper et al., "An approach for sub-second imaging of concealed objects using terahertz (THz) radar," J. Infr., Millim., Terahertz Waves, vol. 30, no. 12, pp. 1297-1307, 2009.
8. H. Quast and T. Loffler, "Towards real-time active THz range imaging for security applications," in Proc. Int. Conf. Electromagn. Adv. Appl. (ICEAA), Sep. 2009, pp. 501-504.
9. K. B. Cooper, R. J. Dengler, N. Llombart, B. Thomas, G. Chattopadhyay,and P. H. Siegel, "THz imaging radar for standoff personnel screening," IEEE Trans. Terahertz Sci. Technol., vol. 1, no. 1, pp. 169-182, Sep. 2011.
10. Friederich et al., "THz active imaging systems with real-time capabilities," IEEE Trans. Terahertz Sci. Technol., vol. 1, no. 1, pp. 183-200, Sep. 2011.
11. Chattopadhyay et al., "Terahertz array receivers with integrated antennas," in Proc. IEEE Int. Workshop Antenna Technol. (iWAT), Mar. 2012, pp. 319-322.
12. T. Reck, C. Jung-Kubiak, C. Lee, G. Chattopadhyay, I. Mehdi, and N. Llombart-Juan, "Terahertz antenna for arrays of hundreds of pixels,"in Proc. IEEE Antennas Propag. Soc. Int. Symp. (APSURSI), Jul. 2012,pp. 1-2.
13. K. B. Cooper et al., "Transceiver array development for submillimeterwave imaging radars," Proc. SPIE, vol. 8715, pp. 87150A-1-87150A-8, May 2013.
14. Blázquez, K. B. Cooper, and N. Llombart, "Time-delay multiplexingwith linear arrays of THz radar transceivers," IEEE Trans. Terahertz Sci.Technol., vol. 4, no. 2, pp. 232-239, Mar. 2014.
15. S. Ozev, A. Orailoglu, and H. Haggag, "Automated test developmentand test time reduction for RF subsystems," in Proc. IEEE Int. Symp. Circuits Syst. (ISCAS), vol. 1. May 2002, pp. I-581-I-584.

16. Y. Joannon, V. Beroulle, C. Robach, S. Tedjini, and J.-L. Carbonero,"Decreasing test qualification time in AMS and RF systems," IEEE Des.Test Comput., vol. 25, no. 1, pp. 29-37, Jan./Feb. 2000.

AUTHOR DESCRIPTION

Nagaraja Kumar Pateti has received his B.Tech degree in Electronics and communications Engineering (ECE)from JNTU Hyderabad in the year 2008 and his M.Tech degree in the year 2012 with VLSI system Design as a specialization from the JNTU Hyderabad. He is Pursuinghis P.hD from Osmania University Hyderabad. He has done his research work in the Defence Research laboratories Hyderabad in the field of RADAR signal processing. He has joined the department of ECE in CMR Institute of Technology in the year 2013 as an Assistant Professor andis continuing his research.

Navitha Pateti has received herB.Tech degree in Electronics and communications Engineering (ECE)from JNTU Hyderabad in the year 2006 and her M.Tech degree in the year 2012 with VLSI system Design as a specialization from the JNTU Hyderabad. She has joined the department of ECE in CMR Institute of Technology in the year 2007 as an Asst Professor anddoing her research work there.