International Journal of Innovative Technology and Exploring Engineering (IJITEE)
ISSN: 2278-3075 (Online), Volume-8 Issue-12, October 2019

Perfection of Designs and Rationale of Parameters of Plastic Koloski Cleaning Cleaners

Orif Murodov

Abstract: ***The article provides effective design schemes and the principle of operation of plastic grates on elastic supports in cotton cleaners for large litter. Based on experimental studies, the nature of the oscillatory movement of plastic grates was determined; the effect of parameters on the grate vibrations was studied. Fully factor experimental studies determined the optimal value of the parameters of the cotton cleaner from large litter.***

Index Terms: ***Cotton, cleaning, coarse debris, grate, plastic, rubber support, vibration, loading, stiffness, effect, damage, quality.***

I. INTRODUCTION

Introduction In the world for the cotton-ginning industry, research works are being carried out aimed at developing innovative equipment and technologies that provide for the effective application of modern achievements of science and technology and the modernization of existing ones. In this industry, including the development of effective, resource-saving designs of working bodies and grate cleaners for cotton from large litter, is important.

In feeding, it is important to create efficient designs of grate cleaners for cotton from large litter and introduce them into production in order to produce products of a given quality based on the initial quality indicators of raw cotton.

Analysis of the cotton sweepers from large litter conducted by the grate showed that they were carried out mainly by determining the diameters of the grates, the pitch between the saws, the gap between the saw cylinder and the grate bars, by determining the frequency of rotation of the saw cylinders. No studies have been carried out on the development of lightweight plastic vibrating grates, on the justification of parameters based on deep theoretical and experimental studies.

Development of efficient designs for the grate structures of cotton cleaners from large litter.

In order to improve existing structures and improve the cleaning effect, we have developed a number of highly efficient grate designs that allow us to preserve the natural qualities of cotton and seeds as much as possible [1, 2, 3].

In the design recommended by us, plastic grate bars are installed in the side segments by means of elastic bushings, the thickness of which is chosen to decrease as cotton is pulled. At the same time, the integrate gaps were also selected decreasing along the cotton pulling, and the difference between adjacent integrate gaps along the cotton pulling was chosen to be equal to the difference of the thickness of the elastic sleeves between the even and odd neighboring grid bars along the cotton slipping. At the same time, at the end of the hauling zone, the cotton will be more loosened, and to reduce the cotton bowl care, along with the litter, the inter-grid slots will have smaller gaps.

The design works as follows (Fig. 1). The saw cylinder 4 grasps raw cotton with its teeth, pulls them through the grate 2. At the same time, the grate 2 oscillates due to the impact of cotton bats on them and deformations of elastic sleeves 3. The thicknesses of elastic sleeves 3 are chosen decreasing in the course of pulling cotton and have ratios:

$$\Delta_1 = r_1 - R;\ \Delta_2 = r_2 - R;\ ...\Delta_n = r_n - R;\quad R;\ \Delta_1 > \Delta_2 > ... > \Delta_n \qquad (1)$$

where, R-grate radii; r_1, r_2,..., r_n outer radii of elastic sleeves 3 corresponding grate 2; Δ_1 , Δ_2,…,Δ_n-the thickness of the elastic sleeves 3 corresponding grates 2.

At the beginning of the zone of pulling cotton raw will be less loosened and therefore due to the greater thickness of the elastic sleeves 3, the grate 2 in this zone will oscillate with greater amplitude and lower frequency, which allows not only the release of trash, but also some loosening of cotton. At the end of the cotton dragging zone, due to the smaller thickness of the elastic sleeves 3, the grate 2 oscillates with a higher frequency and a smaller amplitude. This leads to the release of trash that is found more deeply in the pulp (bat).

Between the grate gaps were also selected decreasing in the course of pulling cotton, which have ratios:

$$a_1 - a_2 = \Delta_1 - \Delta_3;\ a_2 - a_3 = \Delta_2 - \Delta_4;\ a_3 - a_4 = \Delta_3 - \Delta_5;\ ..a_{n-1} - a_n = \Delta_{n-1} - \Delta_{n+1};\ (2)$$

where, a_1, a_2,….,a_n - the gaps between the grate 2 in the course of pulling cotton.

At the same time, the difference in the gaps between adjacent grid bars 2 during cotton pulling is chosen according to (2) equal to the difference in thickness of elastic sleeves 3, respectively, between even and odd adjacent grid bars 2. During cotton pulling, they will be more divided into small pieces and to reduce their loss through the gaps between the grid bars 2, these gaps are made decreasing according to expressions (2).

The recommended grate of the fibrous material allows a significant increase in the cleaning effect and reduces the cotton batting with the excreted litter.

The following grate of a fiber material cleaner has been developed, containing multifaceted grate with a different number of edges, which is selected in such a way that each subsequent grate has a number of edges one more than the previous grate (Fig. 2).

Revised Manuscript Received on October 30, 2019.
***** Correspondence Author
Murodov Orif Jumaevich*, (Tashkent, Uzbekistan) PhD, teacher. Institute of retraining and advanced training of public education workers.

A-A (increased)

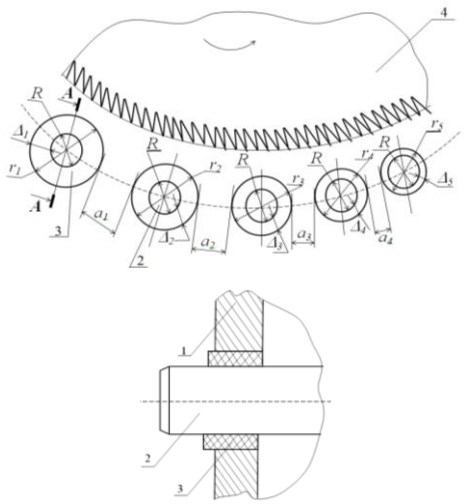

Fig. 1. The grate of the fiber material cleaner

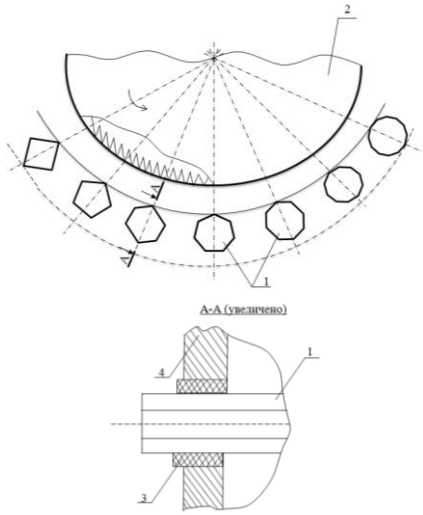

Fig. 2. Grid-type grate of fiber material cleaner with multifaceted grid-bars on elastic supports

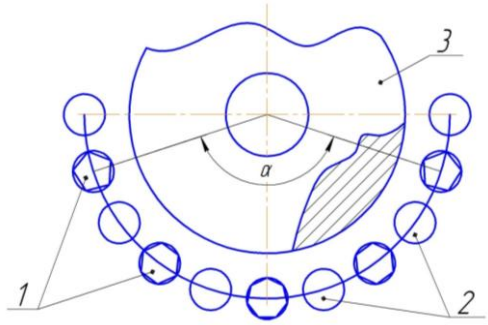

Fig. 3. The grate of the fiber material cleaner

During operation, the raw cotton (fibrous material) goes to the saw cylinders 2, the teeth of which captures the raw cotton and pull it through the grate 1. At the same time, the cotton hits the multifaceted grate 1. In this case, the force and direction of impacts in the direction of rotation of the drum 2 will different due to the different number of edges of the grates 1. With the increase in the number of edges of the grates 1, the impulsive force of impact of cotton on the face of the grates 1 decrease, and with decreasing the number of edges of the grates 1, on the contrary, the force increases Gift. Therefore, in the initial zone of cotton – cotton, hitting the grate 1 with four edges, with greater force, twitches and loses the litter from it. Further, with an increase in the edges of the grates 1, the force of interaction of cotton with the edges of the grates 1 although decreases, but their frequency and direction of interaction increase. This allows for the effective isolation of impurities, mainly large weed impurities from cotton. This adheres to the following ratio:

$$K_i=K_{i-1}+1 \quad (3)$$

where, K_i –the number of faces of the i – that grate 1. $K_{i-1}$the number of faces of the i-1 – that grate.

To improve the performance, the cleaning effect, as well as reduce the care of cotton bales in the bleeder, the design of the grate has been improved, due to the necessary sequence of installation of round and polyhedral grid bars during the cotton pulling.

The alternation of circular grate 2 between multifaceted grate 1 when interacting with a fibrous material significantly reduces their inhibition, and also allows a change in the strength of impulsive interaction and the law of movement of fibrous material in the zone of their pulling. Grate bars can also be made of plastic rods (Fig. 3).

II. ANALYSIS OF THE LOADING OF PLASTIC GRATES ON ELASTIC SUPPORTS

In order to study the dynamic and power loaded in the operating mode with the use of modern methods and devices for measuring the parameters of the machine and the work of the grate, a grate with plastic grates was made.

The main purpose of the experimental research is to study the nature of the oscillatory motion of plastic grates mounted on rubber bushings in the sidewalls of the cotton cleaner from large litter. At the same time, it is important to study the loading of the grates, the amplitudes and frequencies of forced vibrations of the grates, based on the analysis of which justify the necessary parameters of the grate, the elastic support and the cotton cleaning regimes.

To increase the rigidity of the grate on the sidewalls, rods with a diameter of 16 mm are additionally fixed and brackets are welded to them at certain distances, on which there are guide bushings on which rubber guides are worn. In total, the grate has three brackets along the entire length, four spans of the grate with the distance of each section 497mm, on which rubber bushings are worn, through the hole of which 20 mm plastic rods (pipes) are passed. The main physic mechanical properties of the rubber brand SKF36, SKF26 and SKF260, etc. [4, 5].

For the measurements, a 4-channel UT-4-1 strain amplifier with a block and an electronic device “LTR-154” were used to input the measurement information into a computer, i.e. a computerized measuring and information system was used as a whole [6, 7, 8]. Diagram of the measuring device shown in Fig. 4.

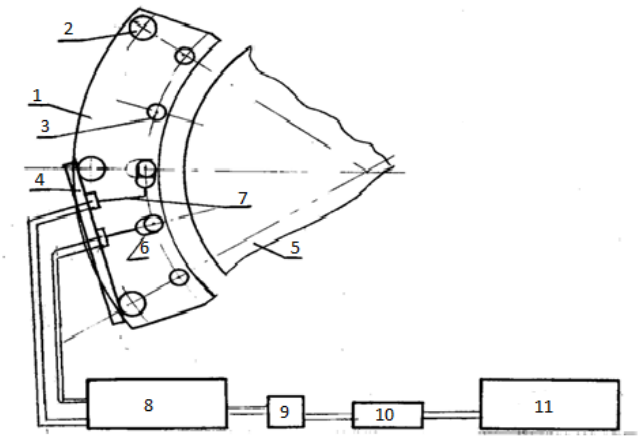

1-side mounting mills. 2-rods stiffness grates. 3-grate. 4-bracket mounting dynamic sensors. 5-roll drum. 6-dynamic sensor on the axis of the VU. 7-dynamic vibration sensor along the axis XX. 8-high frequency amplifier. 9-modulator. 10 – ADC. 11 computers.

Fig.4. the scheme of measuring the indications of displacements (oscillations) of the grid bars in two coordinates

Figure 5 presents the Oscillograms characterizing the oscillations of the plastic grate along the X and Y axes.

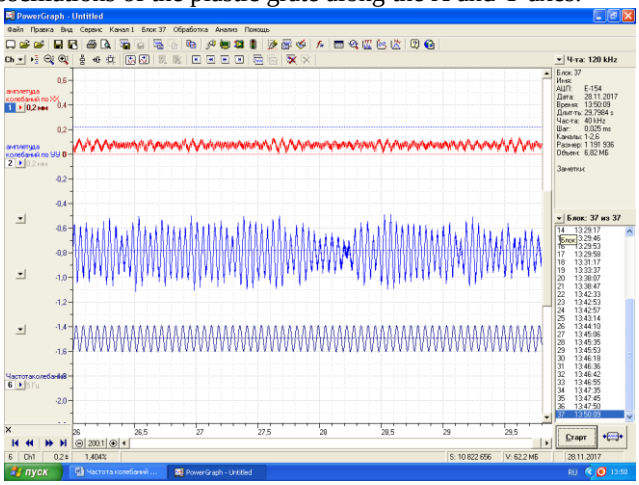

a-at n=300 rad/s; P=5,5 ton / hour, c=1,6·104 N/m

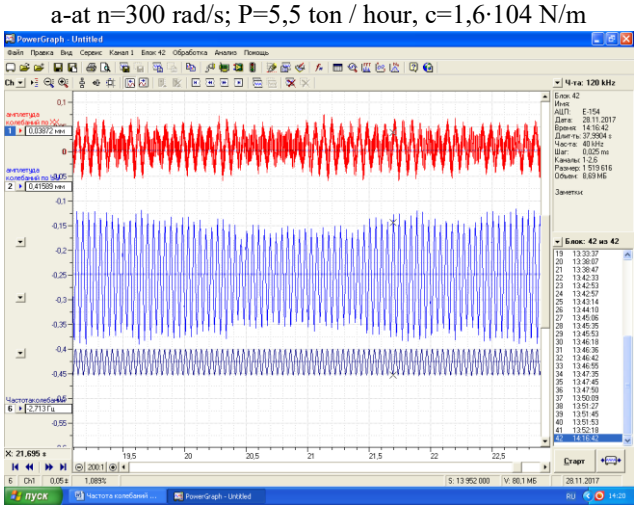

b-at n=310 rad/s; P=7,5 ton / hour, c=1,5·104H/м

Fig.5. Oscillograms characterizing the vibrations of a plastic grate on elastic supports

So, with the frequency of rotation of the serrate drum 300 rad/s, machine performance 5.0 t / h and rigidity of the rubber supports of the grate $1.8\cdot10^{4}$N/m. The Y-axis of the plastic grate reaches $0.55 \cdot 10^{-3}$ m, while the X axis does not actually oscillate (see Fig. 5 a). With an increase in the performance of the cotton cleaner to 7.0 t / h and the frequency of rotation of the serrate drum to 310 rad / s with the stiffness of the rubber supports, the amplitude of oscillations of the plastic grate with $c=1{,}4\cdot10^{4}$N / m increase to $0{,}6\cdot10^{-3}$m along the X axis, and along the Y axis, the oscillation range of the plastic grate on the elastic support comes to $3{,}0\cdot10^{-3}$ On the basis of waveform processing, graphical dependences of the variation of the grate oscillations of both variants along the X and Y axes on the load change from the raw cotton being cleaned, which are shown in Figure 6, were constructed. ΔX and ΔY have a non-linear character. Important is the value ΔY for plastic grate, which directly affects the effect of cleaning raw cotton from coarse litter. So, when increasing the load from 5.0 N to 23.0 N, the oscillation range in the existing grate versionΔXandΔY do not exceed $0{,}5\cdot10^{-3}$m.

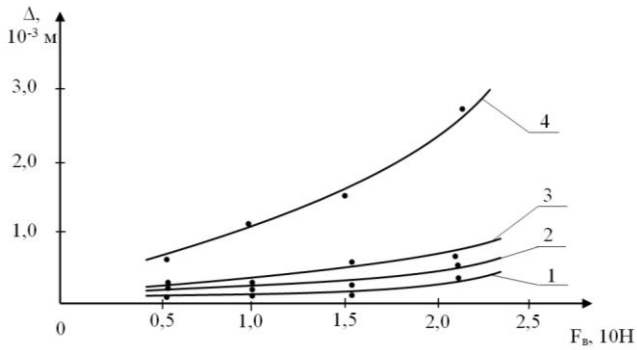

1.2 - for the metal (serial) version of the grate; 3,4- for plastic grate on elastic supports; 1-ΔxandΔy - for metal grate; 3-Δxand 4-Δy –for plastic grate

Fig.6. Graphic dependences of changes in the amplitude of oscillations of the grate on changes in the load from the raw cotton being cleaned

In this case, the oscillation range of the plastic grate on elastic supports along the X axis reaches $1{,}0\cdot10^{-3}$m, and the y axis comes to $3{,}15\cdot10^{-3}$m. At the same time, the plastic grate oscillates vertically with amplitude $1{,}575\cdot10^{-3}$m with a frequency of 6.5÷15.5 times the frequency of rotation of the serrate drum. This means that during the operation of the cleaner, on one revolution of the serrate drum, an average of 6.5÷15.5 times the raw cotton sheaves pulled by the saw cylinder hit the grate, that is, the frequency of forced vibrations of plastic grate reaches 70-80 Hz.

Based on the processing of the obtained oscillograms, graphical dependences of the change in the oscillations of the plastic grate on the increase in the stiffness coefficient of rubber elastic supports of the grate, which are shown in Fig. 7. From the graphs it is seen that the increase in the stiffness coefficient of the rubber sleeve from $1{,}2\cdot10^{4}$N/m before $2{,}15\cdot10^{4}$N/m the oscillation amplitude of the plastic grate along the X axis decreases from $0{,}67\cdot10^{-3}$m before $0{,}18\cdot10^{-3}$m, and the amplitude of oscillation of the grate along the Y axis decreases from $2{,}25\cdot10^{-3}$m before $0{,}58\cdot10^{-3}$m by nonlinear patterns. Experimental studies have revealed that the effect of cleaning raw cotton for large litter is achieved when the amplitude of oscillations of the plastic grate in the aisles $(1{,}7\div2{,}0)\cdot10^{-3}$м.

Therefore, for the case under consideration, the recommended values of the stiffness coefficient of the rubber sleeve of the grate support are (1,6÷2,0) 10^4N / m (rubber grade SCF 32).

It should be noted that with an increase in the stiffness coefficient of the elastic support from $1{,}2\cdot10^4$N / m to $2{,}15\cdot10^4$N / m leads to an increase in the frequency of oscillation of the plastic grate at n = 280 rad / s and P=5,0 t / h by nonlinear regularity from $0{,}2\cdot10^2$ Hz to $0{,}92\cdot10^2$ Hz, and at n=310 rad/s and P=7,0 t / h oscillation frequency along the Y axis comes to $1{,}22\cdot10^2$ Hz (Fig. 8). The highest effect of the cleaning of raw cotton, from large litter is obtained at (65 ÷ 95) Hz. Therefore, with this in mind, the most appropriate values of the stiffness coefficient will coincide $(1{,}6\div2{,}0)\cdot10^4$N/m, and the frequency of oscillation of the grate along the Y axis will be $(0{,}8\div1{,}1)\cdot10^2$ Hz.

From the analysis of the obtained results, it was revealed that the frequency of rotation of the serrate drum also influences the frequency of oscillation of the plastic grate on the elastic supports. At the same time, the raw cotton sheaves, pulled in by the saw cylinder, colliding with the plastic grate, generate forced vibrations of the grate. In fig. 9 shows the patterns of change in the frequency of forced oscillations of plastic grates from an increase in the frequency of rotation of the serrate drum. With the increase in the frequency of rotation of the serrate drum from $0{,}5\cdot10^2$ rad/s to $3{,}1\cdot10^2$ rad/s leads to an increase in the frequency of oscillation of the grate when $c=1{,}4\cdot10^4$N / m from $0{,}125\cdot10^4$Hz to $0{,}52\cdot10^2$Hz, and at $c=2{,}2\cdot10^4$N / m and P=7,0 t / h the frequency of forced vibrations of plastic grate reaches $1{,}28\cdot10^2$Hz Therefore, to increase the frequency of oscillation of the grate, the most effective is to increase the frequency of rotation of the serrate drum. But, this may increase the percentage of damage to the fibers and seeds of cotton due to the increase of impulsive forces on the grate. Therefore, the frequency of rotation of the serrate drum must be set within $(3{,}0\text{-}3{,}15)\cdot10^2$ rad/s.

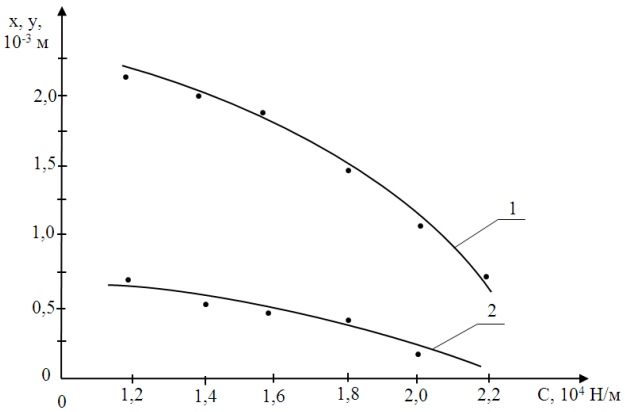

1-y=f(c); 2-x=f(c); at n=290 rad/s; P=7,0 t/h.

Fig.7. Dependences of the change in the amplitude of oscillations of the plastic grate on the change in the stiffness coefficient of the elastic support

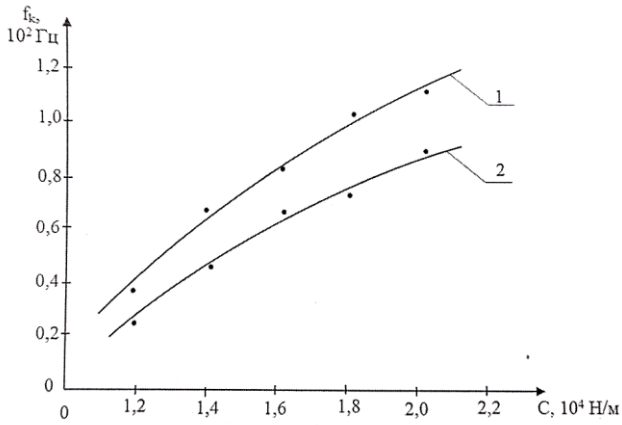

1-at n=280 rad/s, P=5,0 t / h; 2-at n=310 rad/s; P=7,0 t / h

Fig.8. Graphic dependences of the change in the oscillation frequency of the plastic grate on the change in the stiffness coefficient of the elastic support

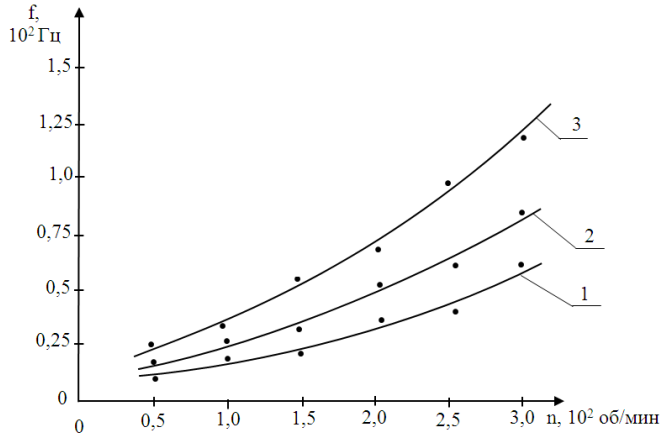

1-at c=1,4·104N/m; 2-at c=1,8·104N/m; 3-at c=2,2·104N/m; at P=7,0 t/h

Fig.9. Graphic dependences of the change in the frequency of forced oscillations of the plastic grate on the variation in the frequency of rotation of the serrate drum.

Important are studies with a change in the gap between the saw cylinder and the plastic grate of cotton cleaner from large litter.

III. RESULTS OF FULL-FEATURED EXPERIMENTS

When conducting research, the following basic parameters were taken into account and divided into input and output.

Input parameters.

1. C- Parameter determining the stiffness of rubber installed on the supports of plastic grates on the supporting frame N / m. X_1
2. Machine productivity X_2, t / hour
3. The gap between the grate and the serrate X_3 mm.

When conducting experiments output parameter, the cleaning effect of cotton Y is selected.

Only significant coefficients are included in the mathematical model of the process. Thus, the system of equations obtained as a result of data processing using the EXCEL computer program is:

Regression equation for 2-grade cotton:

$$Y = 84{,}08 + 0{,}96X_1 - 1{,}28X_2 - 0{,}76X_3 - 2X_1X_2 - 0{,}34X_2X_3 + 0{,}27X_1X_2X_3 \quad (4)$$

regression equation for 4th grade cotton:

$$Y = 80{,}1 + 0{,}33X_1 - 1{,}24X_2 - 1{,}87X_3 - 2X_1X_2 - 0{,}4X_1X_3 + 0{,}73X_2X_3 + 0{,}37X_1X_2X_3 \quad (5)$$

Mathematical calculation of the adequacy of the obtained equations (4) and (5) showed good convergence of models and experimental results.

In models, the value of the regression coefficients characterizes the contribution of the corresponding factor to the value of the output parameter during the transition of the factor from the main level to the upper or lower level. The contribution of the factor in the transition from the lower to the upper level in the value of the output parameter is called the effect of the factor. The greater the regression coefficient, the higher the effect of this factor, i.e. the stronger the influence of the factor on the output parameter. Thus, according to the magnitude of the regression coefficients in the models, factors are sorted by the strength of their influence on y, the sign before the regression coefficient determines the nature of the factor's influence on y. Factors whose coefficients have a plus sign (+) increase the value of the output parameter, and those with a minus sign (-) decrease it.

Consider the influence of input factors on the studied factor, that is, on the cleaning effect. Analysis of the regression equation shows that the main influence on the cleaning efficiency - y, has a rubber stiffness (x_1), performance (x_2), gap between the grate and sawtooth drum (x_3) and interaction of factors (x_1x_3, x_2x_3, $x_1x_2x_3$).

To study these dependencies, a numerical calculation of the curves using the regression equation was carried out for various values of the main factors.

The results of the calculations after processing are presented in the form of graphs (Fig. 10.). In fig. 10a shows the dependences of cotton cleaning efficiency on rubber hardness, where four curves $y = y(x)$ are given. The first curve corresponds to the minimum, the second and the third to the direct, fourth to the maximum values of the factors x_2 and x_3. On the first curve at x_2 = 5.0 t / h, x_3 = 12 mm, it increases from 83.04% to 89.01%, on the second curve at x_2 = 5.66 t/h, x_3 = 13.32 mm, respectively from 82.8% to 83.7%, on the third curve at x_2 = 6.32 t/h, x_3=14.64 mm, respectively, from 83.04% to 83.7%, on the fourth curve at x_2=7 , 0 t/h, x_3 = 16.0 mm, respectively, 82.47% to80.9%.

In fig. 10 b shows the graphic dependence of the efficiency of cleaning raw cotton on the performance of the machine. The presented curves show that with an increase in productivity from 5.0 t / h to 7.0 t / h, depending on the given x_2 and x_3, the cleaning efficiency is characterized by descending. On the first curve at x_1=1,0·10^{4}N/m; x_3=12 mm to 82,5 % to 85,2 %, on the second curve at x_1=1,33·10^{4}N/m, x_3=13,3 mm to 84,4 % to 83,3 % on the third curve at x_1=1,66·10^{4}N/m, x_3=14,64 mm to 86,17 % to 82,12 %, on the fourth curve at x_1=2,0·10^{4}N/m, x_3=16 mm to 87,63 % to 80,9 %.

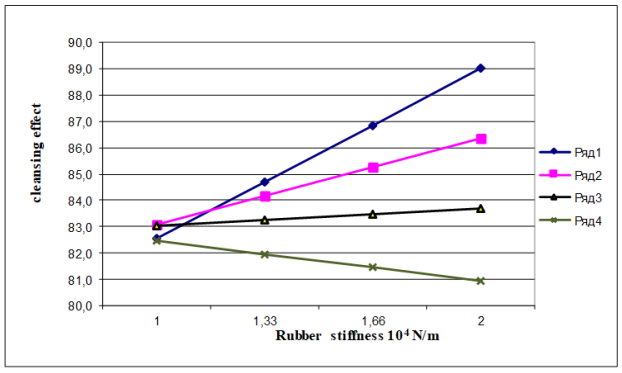

a-graphs of the change in the cleaning effect from variations in the stiffness of the rubber sleeve of the plastic grate, where, 1x_2=5,0 t/h, x_3=12 mm, 2- atx_2=5,33 t/h, x_3=13,32 mm, 3- atx_2=5,66 t/h, x_3=14,64 mm, 4-atx_2=7,0 t/h, x_3=16,0 mm.

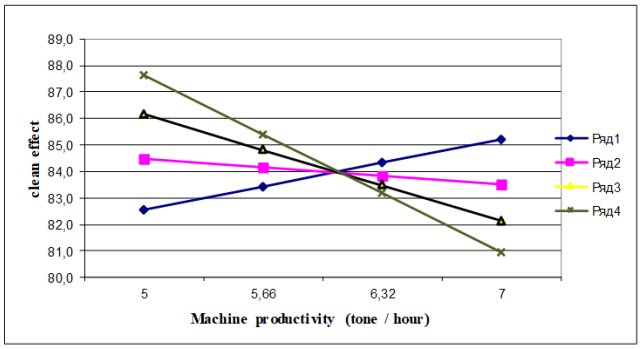

b-graphs of the change in the cleaning effect of the variation in machine performance, where, 1-whe nx_1=1,0·10^{4}N/m; x_3=12 mm, 2-atx_1=1,33·10^{4}N/m; x_3=13,32 mm, 3-atx_1=1,66·10^{4}N/m; x_3=14,64 mm, atx_1=2,0·10^{4}N/m; x_3=16,0 mm.

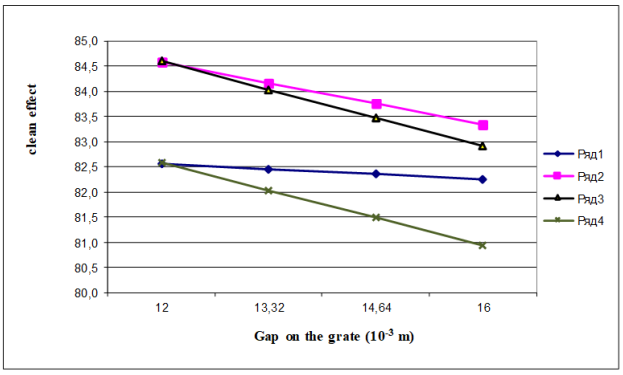

B-graphs of the change in the cleaning effect from the variation of the gap between the grate and the saw cylinder. Where is 1 when x_1=1,0·10^{4}N/m; x_2=5,0 t/h, 2-at x_1=1,33·10^{4}N/m; x_2=5,56 t/h, 3-at x_1=1,66·10^{4}N/m; x_2=6,32 t/h, 4-at x_1=2,0·10^{4}N/m; x_2=7,0 t/h.

Fig. 10. Graphic dependencies of the cleaning effect.

In fig. 10 c shows the influence of the change in the gap between the grate and the serrate drum on the effect of cleaning cotton raw. The presented curves show that with an increase in the gap from 12 mm to 16 mm, depending on the given x_1 and x_2, the cleaning efficiency is characterized by downward curves,

on the first curve with x_1=1,0·10^{4}N/m; x_2=5,0 t/h at 82,59% to 82,25%, on the second curve at x_1=1,33·10^{4}N/m; x_2=5,56 t/hat 84,6 % to 83,35 %, the third curve at x_1=1,66·10^{4}N/m; x_2=6,32 t/h at 83,6% to 82,9 %, fourth curve at x_1=2,0·10^{4}N/m; x_2=7 t/h at 82,5 % to 80,9 %.

The results of the calculations after processing are presented in the form of graphs (Fig. 11.). In fig. 11a shows the dependences of cotton cleaning efficiency on rubber hardness, where four curves y = y (x) are given. On the first curve with factors x_2=5.0 t h, x_3=12 mm, it increases from 82.08% to 85.8%, on the second curve with x_2 =5.66 t/h, x_3=13.32 mm increases from 80.45% to 81.9%, on the third curve with x_2=6.32 t/h, x_3=14.64 mm decreases from 79.17% to 79.14%, and at maximum values i.e. x_2=7 t/h, x_3=16 mm, decreases 82.47% to 80.93%.

In fig. 11 b shows the graphic dependence of the efficiency of cleaning raw cotton on the performance of the machine. The presented curves show that with an increase in productivity from 5.0 t/h to 7.0 t/h, depending on the x_2 and x_3 given, the cleaning efficiency is characterized by descending.

On the first curve at x_1=1,0·10^{4}N/m; x_3=12 mm at 82,01 % to 78,52 %, on the second curve at x_1=1,33·10^{4}N/m, x_3=13,3 mm at 85,52 % to 78,6 % on the third curve at x_1=1,66·10^{4}N/m, x_3=14,64 mm at 80,25 % to 78,08 %, on the fourth curve at x_1=2,0·10^{4}N/m, x_3=16 mm at 76,4 % to 77,26 %.

In fig. 11 c shows the influence of the change in the gap between the grate and the serrate drum on the effect of cleaning cotton raw. The presented curves show that with an increase in the gap from 12 mm to 16 mm, depending on the given x_1 and x_2, the cleaning efficiency is characterized by downward curves, on the first curve with x_1=1,0·10^{4}N/m; x_2=5,0 t/hat

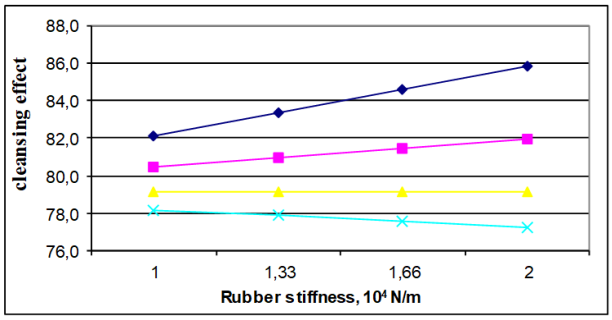

a-graphs of the change in the cleaning effect from variations in the stiffness of the rubber sleeve of the plastic grate, where, 1-at x_2=5,0 t/h, x_3=12 mm, 2- at x_2=5,33 t/h, x_3=13,32 mm, 3- at x_2=5,66 t/h, x_3=14,64 mm, 4-at x_2=7,0 t/h, x_3=16,0 mm.

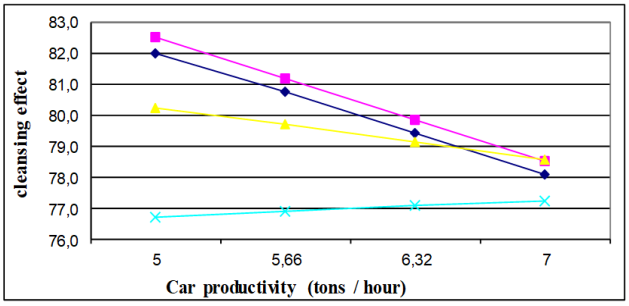

b-graphs of the change in the cleaning effect of the variation in machine performance, where, 1- with x_1=1,0·10^{4}N/m; x_3=12 mm, 2-at x_1=1,33·10^{4}N/m; x_3=13,32 mm, 3-atx_1=1,66·10^{4}N/m; x_3=14,64 mm, 4-atx_1=2,0·10^{4}N/m; x_3=16,0 mm.

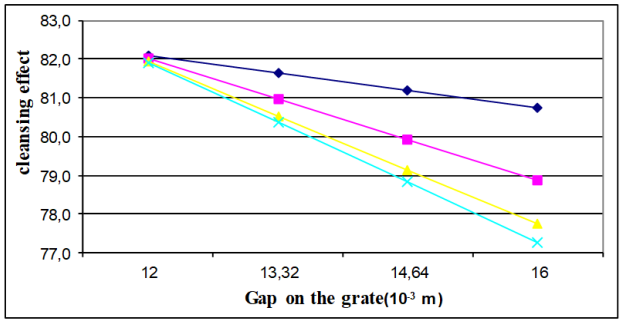

B- graphs of the change in the cleaning effect from the variation of the gap between the grate and the saw cylinder. Where is 1 whenx_1=1,0·10^{4}N/m; x_2=5,0 t/h, 2-atx_1=1,33·10^{4}N/m; x_2=5,56 t/h, 3-atx_1=1,66·10^{4}N/m; x_2=6,32 t/h, 4-atx_1=2,0·10^{4}N/m; x_2=7,0 t/h.

Fig. 11. Graphs of changes in the cleaning effect

82.08% to 80.74%, on the second curve at x_1=1,33·10^{4}N/m; x_2=5,56 t/h at 82,0 % to 78,89 %, the third curve at x_1=1,66·10^{4}N/m; x_2=6,32 t/h at 82,04% to 77,74 %, fourth curve at x_1=2,0·10^{4}N/m; x_2=7 t/h at 81,9 % to 77,2 %.

The gap between the grate and the serrate drum affects the cleaning process in a straight line. By changing the gap, you can adjust the cleaning effect.

The main result of the full factorial experiment is the determination of the influence of incoming factors on the outgoing factor. All of the above parameters and their ratio affect the process of cleaning raw cotton. It is necessary to choose the parameters of the input factors that would work to improve the cleaning process. An analysis of the results obtained during a fully factorial experiment allows us to recommend the following values for selected key factors:

- productivity, t / h - 5.0;
- rubber hardness - 2,0·10^{4}Н/м;
- the gap between the grate and saw tooth drum - 16 mm.

With these values of the factors, effective operation of the raw cotton cleaner is observed, that is, the cleaning effect is above 90%.

IV. CONCLUSION

Developed newer effective schemes lightweight construction of plastic grates on elastic supports. Experimental studies have obtained Oscillograms characterizing the laws of the oscillatory movement of plastic grate on elastic supports with changes in the load from the raw cotton being cleaned, the stiffness coefficient of rubber bushings (supports) and the frequency of rotation of the serrate drum. The full-factor experiments substantiated the parameters of the purifier, which allow a significant increase in the cleaning effect.

REFERENCES

1. A.Djuraev, O.Murodov. Granulation of the parameters of grate bar onelastic support with non-linear hardness. The european science review. № 7–8. 2017. July–August. Vienna • Prague 2017. page-109-111.

2. Dzhuraev A.D., Murodov O.Zh. Investigation of lightweight grate oscillations on elastic supports of raw cotton cleaner from coarse litter in case of random disturbance. Vestnik TashDu No. 2, 2017, pp.95-100.
3. A. Dzhuraev, O. Murodov and others. Modes of movement of the feeder drum with random resistance from cotton. J. Problems of textiles. No. 4, p.8-11. T., 2005
4. Juraev A., Yunusov S., Mirakhmedov J., Murodov O. New lightweight constructions of saw cylinders for cotton cleaners on elastic bearing supports. "Machine-building zonavivy materiallar, technique va tekhnodarar", Khalkaro ilmiy- tekhnikovi anzhumani, 2 section, 94-97 b. Andijon-2016.
5. Manley R. Analysis and processing of records of fluctuations. Mechanical Engineering, M., 1974, 368s.
6. Yudenich V.V. laboratory workshop on TMM. High school, M., 1962, 287s.
7. Timoshenko S.P., Young D.H., Unver U., Fluctuations in engineering. Mechanical Engineering, M., 1985, 472.

AUTHOR PROFILE

Murodov Orif Jumaevich (Tashkent, Uzbekistan) PhD, teacher. Institute of retraining and advanced training of public education workers, phone: +99890-7150488