International Journal of Innovative Technology and Exploring Engineering (IJITEE)
ISSN: 2278-3075 (Online), Volume-8 Issue-12, October 2019

# Automated Brain Tumor Segmentation and Identification using MR Images

**Mahalakshmi, Krishnappa H K, Jayadevappa D**

***Abstract*: *Automatic identification of tumor in human brain is a challenging task due to its varying in size, shape and location. This paper proposes a multi-modality technique for the segmentation of brain tumor its classification to differentiate easily between cancerous and non-cancerous tumor from MR images of the human brain. To achieve this, different segmentation and classification techniques have been applied. The important stages involved in the proposed technique are pre-processing, segmentation and classification stages. The pre-processing step is carried out using wavelet transform, segmentation stage is done by applying modified Chan-Vese model and finally the extracted tumor can be classified as benign or malignant using Support Vector Machine (SVM) classifier. The experimental results on MR images prove that, the proposed method is efficient and robust to noise. Moreover, the comparisons with existing techniques also show that, the proposed method takes less computational time and classify the tumors very accurately.***

***Keywords*: *Segmentation, SVM, Active contours, MRI, Wavelet transform.***

## I. INTRODUCTION

The brain tumor detection helps diagnosis to identify the brain tumor anomalies. The image obtained from MRI scanner is pre-processed by applying various denoising techniques. The early detection of brain diseases helps in reducing the number cf casualties. Due to the complex nature of the brain and interconnection of various tissues in the brain makes surgery and radiation therapy very difficult. To solve these issues, researchers have developed various segmentation mechanisms. Even though there are ample number of algorithms for the segmentation brain tumor from MR images, there are few challenges remains unanswered. In human brain, these tumors vary in shape, location and appearance. Hence, it is tough task for the radiologists to come to the conclusion about the future decisions on patient's conditions.

**Revised Manuscript Received on October 30, 2019.**
***** Correspondence Author
**Ms. Mahalakshmi***, Research Scholar, Department of Computer Science & Engineering, R V College of Engineering (Autonomous), Bangalore, Karnataka, India. Email: *mahalakshmishetty55@gmail.com*
**Dr. Krishnappa H K**, Department of Computer Science & Engineering, R V College of Engineering (Autonomous), Bangalore, Karnataka, India. Email: *krishnappahk@rvce.edu.in*
**Dr. Jayadevappa D**, Department of Electronics & Instrumentation Engineering, JSS Academy of Technical Education, Mysore, Karnataka, India. Email: *devappa22@gmail.com*



The MRI modality has the capability to provide multimodal imaging facility so that detailed structural views can be captured and analyzed in 3D also [1]. To overcome these issues, many researchers have developed efficient algorithms for the segmentation of brain tumors [2], [3], [4].

The analysis of the 2-D representation is executed manually with trained human intervention to produce medically understandable reports. Consequently this process is not satisfactorily error prone and not timely. Therefore the demand of the recent research is strong enough to propose automation is medical diagnosis of MR Image for detection of diseases based on the affected brain region. The Image segmentation techniques are the most frequent used research methods in the space of image processing and detection of image regions. Henceforth the focuses of this work continue to compare the performance of image segmentation techniques. Objects and boundaries in an image are located using image segmentation. As we aware that, medical image segmentation is the powerful and significant issue for medical image analysis, which finds variety of applications in clinical field. This has many critical applications mainly, in visualization of anatomical structures of the brain, analyzing pathology of the brain, surgical planning and also in image guided surgery. This is the commonly used tool for MRI segmentation. There are various segmentation techniques used in defining or analyzing the accuracy and degree of complexity of an image [5], [6], [7]. For treatment planning of various brain anomalies, the classification of tumor type is equally important. In earlier days, the tumor type was identified through biopsy and lumbar puncture methods and they are invasive and lead to discomfort for the patient.

## II. LITERATURE REVIERW

Deformable models i.e., active contours or snakes [8] is one of the popular and accurate technique in medical image segmentation. Because of its strong mathematical foundation, most of the researchers found favorable results by applying active contour or deformable models for the segmentation of brain tissues. The basic principles of AC Models are to capture tumor boundaries by evolving the curve or contour initialized in given image. The contour initialization can be done automatically or manually near the object of interest or anywhere in the image. In the tradition, active contour models, the explicit snake model is based on the parametric curve representation [9]. But these methods were lacking in topological changes and to overcome these limitations many techniques have been introduced in recent times. The partial differential equations based level sets and variational level sets have become popular in medical image segmentation [10].

The level set methods are capable of segmenting multiple boundaries simultaneously and any number of contours can be initiated across the image. This helps automatic segmentation of brain tumors with predetermined initial contours. The edge-based ACM make use of image gradient to build the force to attract the contours towards the object boundary. But, the main drawbacks of these models are that, they are prone to the noise and very difficult to segment the tumor which is having blurred edges. Also, the position of the contour is such that, the segmentation accuracy based on the positioning of contour in the image. Another segmentation models known as region based AC models in which, statistical details are utilized to form the constraints. These models have many advantages as compared to the edge based active contour models.

- Independent to gradient of an image
- Segments objects with weak boundaries
- Robust to noise due to statistical information

The general image segmentation model called Mumford-Shah model [11] decompose an image into number regions and smooth is used to approximate each region of interest. The best segmentation can be achieved by minimizing the Mumford–Shah functional. But, it is nonconvexity in nature and difficult for the minimization. In region based active contour modes, the Chan-Vese (CV) method [12], is one of the prominent segmentation model. The CV model is the new version of Mumford Shah functional and it is very important model and it successfully used for images having intensity inhomogenities and two regions with a distinct mean of pixel intensity. When the contour is moving near to the boundary of objects, due to the interference from the force of global intensity leads to wrong convergence of the contour. To solve the inhomogeneity of intensity problem, Li et al. [13] presented Local Binary Fitting model. Due its local region details particularly local intensity mean, the LBF model can cope with intensity inhomogeneity. But still these techniques are very sensitive to noise and other artifacts. To overcome these disadvantages Wang et al. [14] described the technique which is used to combine the global and local intensity information. When initialization of the contour is too far away from the boundaries of tumors the force from the global intensity information is dominant and has large capture range. To overcome this limitation, modified version of CV model is introduced. By applications of local information, images with intensity inhomogeneity may be effectively handled. In this method, the segmentation results of CV model are applied as initial contour of the modified CV model to avoid manual segmentation.

## III. MATERIALS AND METHODS

The brain tumor detection is the basic issue for the analysis medical images. The main intention of the of the proposed work is to develop an automatic brain diagnosis tool for quantification of tumor from human brain. A brain tumor segmentation method can be implemented so that, tumor types can be classified using SVM classifiers. The following block diagram illustrates the proposed methodology. In this section, pre-processing, segmentation, feature detection and classification were also discussed as part of the materials and methods.

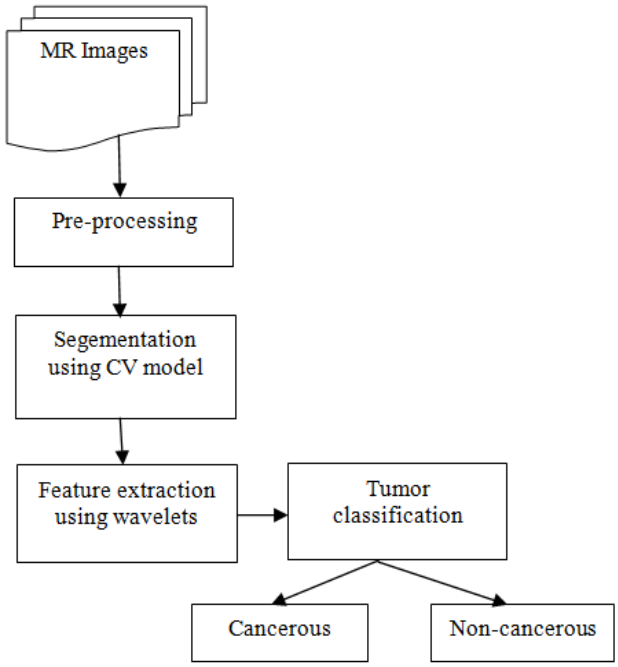


**Figure 1. Frame work of the proposed methodology.**

### A. Pre-Processing

To get better segmentation accuracy, it is necessary to use denoising technique. The better enhancement of the MR image can be obtained by removing blurring and artifacts. The images obtained from MRI scanners are usually corrupted by artifacts such as Poisson noise and Gaussian [15]. To eliminate these types of noises, edges preserving bilateral filters are most suitable and in this paper, the median filter is used as denoising filter. Because of its non-linear characteristics, it effectively reduces the noises and artifacts by retaining the edge information. Basically, median filter functions as moving pixel by pixel through the image by replacing every value of the neighboring pixels with a median value. The pattern of neighbors is known as ‘‘window’’. This window will slides through the image slides pixel by pixel. The value of the median is computed as numerical values by sorting all the values of pixel from the window and replacing the pixel which is considered to be the median value of pixel. It is found that, median filter performs better than linear filtering process and most of the segmentation techniques proposed in literature have applied median filtering as pre-processing method before segmentation process.

### B. Modified Chan-Vese Model

Recently most of the researchers prefer deformable models for the segmentation of medical images because of their strong mathematical background. The C-V (Chan Vese) active contour model is an example of GAC (Geometric Active Contour) deformable model. In this technique, a curve is defined and initialized in an MR image and then evolving this based on the energy minimization principle. In this work, Chan-Vese model presents a technique which segments the brain tumor from MR image by combining the active contour and Mumford Shah’s models, when object boundaries are very weak. Image consists of objects namely background and foreground.

Let $X=(x,y)$ correspond to the pixels coordinates of an image $I$ here, the aim is to evolve the contour $C$ such that $C$ is the boundary of the object in an image. Let $C_1$ and $CR_2$ are the mean intensities of pixels outside as well as inside of the contour, then Chan-Vese model can be expressed by using the following energy function.

$$F_{CV}(cr_1,cr_2,\phi)=\mu\int_{\Omega}\delta_{\varepsilon}(\phi(x,y))|\nabla\phi(x,y)|dxdy+v\int_{\Omega}H_{\varepsilon}(\phi(x,y))dxdy$$
$$+\lambda_1\int_{\Omega}|I(x,y)-cr_2|^2H_{\varepsilon}(\phi(x,y)dxdy$$
$$+\lambda_2\int_{\Omega}|I(x,y)-cr_2|^2(1-H_{\varepsilon}(\phi(x,y)))dxdy \quad (1)$$

where, $\mu\geq 0, v\geq 0, \lambda_1,\lambda_2>0$ are constant parameters, $H$ is the Heaviside function.

$$\begin{cases} Cr=\{(x,y)\in\Omega:\phi(x,y)=0\} \\ (Cr)_{Inside}=\{(x,y)\in\Omega:\phi(x,y)>0\} \\ (Cr)_{Outside}=\{x,y)\in\Omega:\phi(x,y)<0\} \end{cases} \quad (2)$$

Let user inputs $\{x_i=(x_i,y_i)|i=1,....N\}$. the user can select these points manually either inside the object or outside the object of interest and they are called as seeds. Generally, intensities of the selected seeds are of better representation of the pixel intensities inside the object.

Let us define

$$lT=\min\{I(X_i)|i=1,....,N\} \quad (3)$$

$$uT=\max\{I(X_i)|i=1,....,N\} \quad (4)$$

Equation (3) and (4) are corresponding to max. and min. intensities of seed. Now, the new two energy parameters where one is penalized if the segmentation has objects with intensities lower than $lT$ or higher that $uT$ and the other one is penalized if the segmentation does not have region of interest with intensities in the range $(lT,uT)$. Then, the two functions $L_1$ and $L_2$ are as follows.

$$L_1(x)=\left(\frac{2X-lT}{uT-lT}-1\right)^{k_1} \quad (5)$$

$$L_2(x)=e^{-}\left(\frac{2X-(uT+lT)}{uT-lT}\right)^{k_2} \quad (6)$$

where, $k_1,k_2$ are positive even integers. To provide user input in the formulation of the energy term in the original Chan-Vese model, equations (5) and (6) can be incorporated in the original energy functional equation.

### C. Feature Extraction using Wavelet Transform

In medical image segmentation, the extraction of features plays a very significant role to improve the segmentation accuracy. In this paper, wavelet transform is used to extract coefficient of wavelets from MR image of the brain. The specialty of the wavelets is that, the multiresolution analysis can be done by decomposing the input image into different levels for the visualization of the MR in different scales [16]. The 2D-DWT has LL, LH, HL, HH sub bands. The useful characteristic of the wavelet transform is that the localized frequency details about each function of the signal can be easily obtained. The following figure illustrates the DWT process.

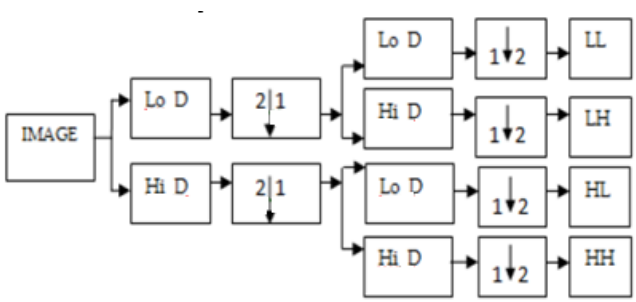


**Figure 2. Two dimensional decomposition of DWT**

Brain image is taken as input image and it is translated into detailed coefficient and approximation coefficient by using high pass and low pass filters. The approximation coefficient value set as zero to eliminate the low frequency, which contains in the input image. Residual coefficients are used for image reconstruction. Incorporate the new approximation coefficients into detail coefficients to create a novel coefficient. Wavelet reconstruction technique is used in the novel coefficient to translate into preprocessed image.

By using feature extraction methods, the visual information of the given image can be obtained. The main purpose of this process is to project the original image into its normalized pattern to take decision which is equivalent to making the process equivalent to the task of pattern. The extracted features from MR image are used for classification of tumors types. By using SVM classifiers, the normal and abnormal tumors were classified.

### D. SVM Classifier

The SVM is a method widely used as a classifier tool [17]. SVM is capable of solving nonlinear and high dimensional pattern recognition problems. The identification task of tumor types are obtained by grouping of pixels based on their respective intensities with the help of certain criterion. In the process of identifying tumor types, the user job is to provide the detected tumor as input to one class SVM classifier. This approach learns the non-linear tumor data distribution automatically without any prior knowledge and optimize flexible decision about the tumor boundary in an image. SVM is computationally less expensive and performs very well for high dimensional spaces. SVM does not experience ill effects towards the small training data sets and gets ideal result for pragmatic issue since its choice surface is determined by the inward result of preparing information which empowers the change of information to a high dimensional component space [18], [19]. The feature space may be expressed using kernel function $k(x,y)$. Here, the radial basis kernel function is applied as mentioned in the equation (7).

$$k(x,y)=\mathrm{e}^{-\|x-y\|^2/2\sigma^2} \quad (7)$$

Where $\sigma$ = width of the kernel and this user can decide.

In the process of diminishing the coexisting under-fitting and over-fitting loss in SVM classification is carried out using Gaussian RBF kernel.

The Weighted Gaussian RBF kernel can be expressed as.

$$k(x,y) = e^{-(-\lambda\_weight(x) X \lambda\_weight(y) X \lambda X \|x-y\|^2)} \quad (8)$$

where, $\lambda\_weight$ is a variable with small range of change. Using the Matlab tool, several intensity based features which are captured by wavelets transform are collected and then the fed to the SVM classifier which in turn detects normal and abnormal tumors.

**E. Results and Discussion**

In this work, two benchmark data sets namely BRATS [20] and Brain web [21] are were used to analyze the performance of the proposed algorithm. These BRATS database are collected from internet with proper registration procedure. These databases give images in different dimensions which are resized according to our requirements without compromising with image resolution. Examples of normal and abnormal brain images are depicted in figures 3.

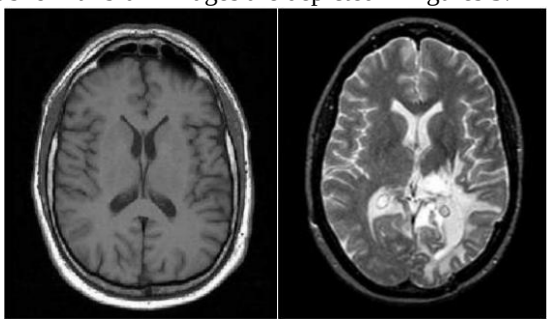

**Figure 3. MR images of brain, (a) Normal condition (b) Abnormal condition**

The segmentation results are obtained by applying CV approach on a medical images having tumor history is shown in figures 4, 5 and 6 respectively.

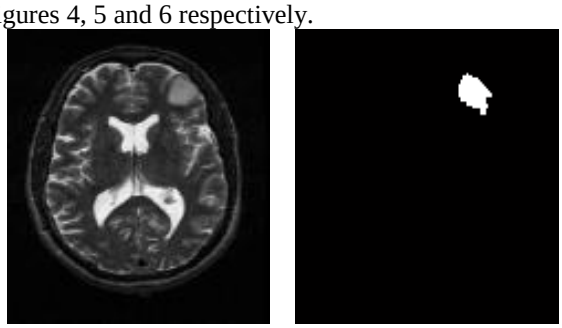

**Figure 4. Segmentation results of tumor image 1, (a) Input image, (b) segmented tumor.**

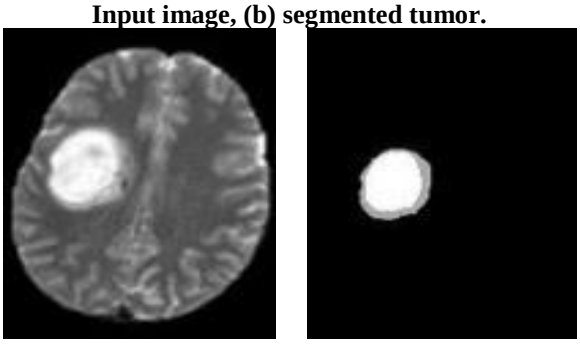

**Figure 5. Segmentation results of tumor image 2, (a) Input image, (b) segmented tumor.**

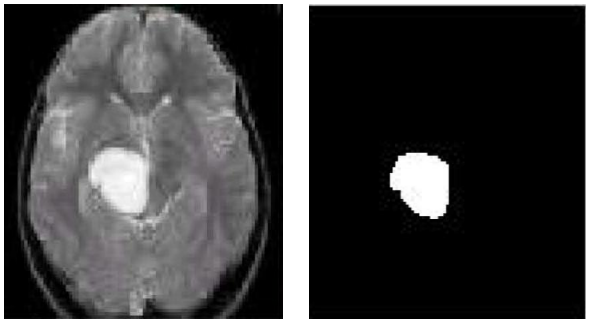

**Figure 6. Segmentation results of tumor image 3, (a) Input image, (b) segmented tumor.**

The proposed segmentation technique is evaluated by applying performance metrics namely, Jaccard and Dice coefficients. These are important performance metrics used by the researchers to evaluate the performance of the segmentation algorithms. The following table presents segmentation accuracy of the proposed segmentation methods for the tumor image 1, 2 and 3 respectively.

**Table I. Comparative analysis of different segmentation models with the proposed model for MR image 1.**

| MR Image 1 | | |
|---|---|---|
| Segmentation method | Performance measures | |
| | Dice coefficient | Jaccard coefficient |
| Active contour [22] | 0.79 | 0.83 |
| CRF [23] | 0.81 | 0.84 |
| Proposed method | 0.88 | 0.91 |

**Table II. Comparative analysis of different segmentation models with the proposed model for MR image 2.**

| MR Image 2 | | |
|---|---|---|
| Segmentation method | Performance measures | |
| | Dice coefficient | Jaccard coefficient |
| Active contour [22] | 0.78 | 0.80 |
| CRF [23] | 0.82 | 0.83 |
| Proposed method | 0.87 | 0.89 |

**Table III. Comparative analysis of different segmentation models with the proposed model for MR image 3.**

| **MR Image 3** | | |
|---|---|---|
| **Segmentation method** | **Performance measures** | |
| | **Dice coefficient** | **Jaccard coefficient** |
| Active contour [22] | 0.77 | 0.79 |
| CRF [23] | 0.79 | 0.81 |
| Proposed method | 0.91 | 0.93 |

Discrete wavelet transform extracts the features of the segmented brain tumor and inputs these parameters to SVM classifiers to classify the different types of tumors based on the features detected by the DWT. The Matlab tool classifies each row of the data in sample, a matrix of data, using the information in a SVM classifier. Hence, malignant and benign tumors are classified. The following table demonstrates the classification using SVM classifier [24 – 30].

**Table IV. Tumor classification using SVM classifier**

| Images type | Images for training | Testing phase | | Over all correctly classified | Over all classification accuracy (%) |
|---|---|---|---|---|---|
| | | Correctly classified | Wrongly classified | | |
| Normal | 15 | 10 | 0 | 25 | 100 |
| Abnormal | 39 | 36 | 1 | 74 | 98.6 |
| Metastates | 20 | 25 | 4 | 41 | 92 |
| Total | 74 | 71 | 5 | 140 | 96.8 |

## F. Conclusion

In this work, the development and performance evaluation of segmentation algorithm to detect the brain tumor from MR images. The detected tumors are classified accurately using SVM classifiers. The comparative analysis of the proposed segmentation results and the existing techniques were carried out. This comparison results proves that, the accuracy of the segmentation algorithm is better than the existing segmentation algorithms. This helps doctors to diagnose brain tumors effectively and can save their precious time. This technique also classified tumor type effectively without any ambiguity.

## REFERENCES


1. Bauer S, Wiest R, Nolte L-P, Reyes M (2013) A survey of MRI based medical image analysis for brain tumor studies. Phys Med Biol. 58:R97
2. B. Peng, L. Zhang, D. Zhang, et al., Image segmentation by iterated region merging with localized graph cuts, Pattern Recognition 44 (10–11) (2011) 2527–2538.
3. K. Zhang, L. Zhang, S. Zhang, A variational multiphase level set approach to simultaneous segmentation and bias correction, in: Proceedings of the 17th IEEE International Conference on Image Processing, Hong Kong, 2010, pp. 4105–4108.
4. B. Peng, L. Zhang, J. Yang, Iterated Graph Cuts for Image Segmentation, ACCV 2009.
5. E. D. Angelini, O. Clatz, E. Mandonnet, E. Konukoglu, L. Capelle, and H. Duffau, "Glioma dynamics and computational models: A review of segmentation, registration, and in silico growth algorithms and their clinical applications," *Curr. Med. Imag. Rev.*, vol. 3, pp. 262–276, 2007.
6. S. Bauer, R. Wiest, L.-P. Nolte, and M. Reyes, "A survey of MRI-based medical image analysis for brain tumor studies," *Phys. Med. Biol.*, vol. 58, no. 13, pp. R97–R129, Jul. 2013.
7. M. Styner, "3D segmentation in the clinic: A grand challenge II: MS lesion segmentation," MIDAS J., pp. 1-5, 2008.
8. M. Kass, A. Witkin, D. Terzopoulos, Snakes: active contour models, International Journal of Computer Vision 1 (4) (1987) 321–331.
9. C. Xu, J. Prince, Snakes, shapes, and gradient vector flow, IEEE Transactions on Image Processing 7 (3) (1998) 359–369.
10. S. Osher, J. Sethian, Fronts propagating with curvature dependent speed: algorithms based on Hamilton-Jacobi formulation, Journal of Computational Physics 79 (1988) 12–49.
11. D. Mumford, J. Shah, Optimal approximation by piecewise smooth function and associated variational problems, Communication on Pure and Applied Mathematics 42 (1989) 577–685.
12. L. Vese, T. Chan, A multiphase level set framework for image segmentation using the. Mumford and Shah Model, International Journal of Computer Vision 50 (3) (2002) 271–293.
13. C. Li, C. Kao, J.C. Gore, Z. Ding, Minimization of region-scalable fitting energy for image segmentation, IEEE Transaction on Image Processing 17 (10) (2008) 1940–1949.
14. L. Wang, C. Li, Q. Sun, D. Xia, C. Kao, Active contours driven by local and global intensity fitting energy with application to brain MR image segmentation Journal of Computerized Medical Imaging and Graohics 33 (7) (2009) 520–531.
15. Rodrigues I, Sanches J, Dias J. Denoising of medical images corrupted by Poisson's noise. In: Image processing, ICIP 2008. 15th IEEE international conference on; 2008. pp. 1756–9.
16. Sifuzzaman M, Islam M, Ali M (2009) Application of wavelet transform and its advantages compared to Fourier transform. J Phys Sci 13:121–134.
17. N. Cristianini, J. Shave-Taylor, An Introduction to Support Vector Machines. Cambridge, U.K: Cambridge University Press, 2000.
18. B. Schölkopf and A. J. Smola, Learning with Kernels Support Vector Machines: Regularization, Optimization and Beyond. Cambridge, MA: MIT, 2002.
19. Liao Y.-Y., Tsui, P.-H., Yeh, C.-K, "Classification of benign and malignant breast tumors by ultrasound B-scan and nakagami-based images", J. Med. Biol. Eng.30, (5), 2009, 307–312.
20. MICCA Nice <http://www2.imm.dtu.dk/projects/BRATS/data.html>;
21. Brain Web: Simulated Brain Database. <http://brainweb.bic.mni.mcgill.ca/brainweb/>;
22. Guo X, Schwartz L, Zhao B, "Semi-automatic segmentation of multimodal brain tumor using active contours", In: Proceedings MICCAI BRATS, 2013.
23. Wu W, Chen AY, Zhao L, Corso JJ, "Brain tumor detection and segmentation in a CRF (conditional random fields) framework with pixel-pairwise affinity and super pixel-level features", Int. J. Comput. Assist. Radiol. Surg. 9:241–253, 2014.
24. Rajendran T & Sridhar K P, "Epileptic seizure classification using feed forward neural network based on parametric features". International Journal of Pharmaceutical Research, 10(4): 189-196, 2018.
25. Hariraj V, Khairunizam W, Vikneswaran V, Ibrahim Z, Shahriman A B, Razlan Z M, Rajendran T, Sathiyasheelan R, "Fuzzy multi-layer SVM classification of breast cancer mammogram images", International Journal of Mechanical Engineering and Technology, 9(8): 1281-1299, 2018.
26. Muthu F, Aravinth T S & Rajendran T, "Design of CMOS 8-bit parallel adder energy efficient structure using SR-CPL logic style", Pakistan Journal of Biotechnology, 14(Special Issue II): 257-260, 2017.
27. Yuvaraj P, Rajendran T & Subramaniam K, "Design of 4-bit multiplexer using Sub-Threshold Adiabatic Logic (STAL)", Pakistan Journal of Biotechnology, 14(Special Issue II): 261-264, 2017.
28. Keerthivasan S, Mahendrababu G R & Rajendran T, "Design of low intricate 10-bit current steering digital to analog converter circuitry using full swing GDI", Pakistan Journal of Biotechnology, 14(Special Issue II): 204-208, 2017.
29. Vijayakumar P, Rajendran T & Mahendrababu G R, "Efficient implementation of decoder using modified soft decoding algorithm in Golay (24, 12) code", Pakistan Journal of Biotechnology, 14(Special Issue II): 200-203, 2017.
30. Rajendran T & Sridhar K P, "Epileptic Seizure-Classification using Probabilistic Neural Network based on Parametric Features", Journal of International Pharmaceutical Research 46(1): 209-216, 2019.