Wireless Power Transmission for Medical and Other Applications

A.Sadeesh Kumar, N.Hariprasad, N.Sivabalan, D.Jacob Joshua, J.Sriram

Abstract—wireless power transfer was discovered by Nikolas tesla. This project is developed for power transfer for small range application.The objective of this work is to make the batteriescharge which are impossible to be connected electrically such as devices which are implanted in the body such as cochlear implants defibrillators etc..More than 6 lakhs pacemakers are embedded each year worldwide .A cardiac stimulation makes use of half of the battery power of a cardiac pacemaker and the other half of its power for monitoring and data logging. A periodic operation procedure is required for battery replacement. This work is to design awirelesslyrechargeable battery for the above problem.

Keywords: Powertransmission;Zigbee;Pacemakers;Induction.

I. INTRODUCTION

Nikola tesla was the pioneer in Wireless power transfer,the technology of wireless power transfer has been harnessed to the point since the past decade and was able to benefit the real world applications. In the electronics market the process of charging everyday usable devices wirelessly has also seen higher levels of technology in the same decade of invention.

A transmitter and receiver coil makes the parts of an wireless power system. An alternating current energizes the transmitter thereby creating a magnetic field, which in turn causes an induction of current in the receiver coil.

The key principle behind wireless power is the energy transmission from the transmitter to that of a receiver coil by an oscillating magnetic field created. Hence, To create such an high frequency alternating current a converter is implemented which performs the necessary conversion (DC to AC) is found inbuilt inside the transmitter circuit. This high frequency alternating current in turn energizes the transmitter copper coil , which generates a magnetic field. Withinthe vicinity of the magnetic field,the presence of the receiver coil will induce an alternating current as a result.

II. METHODOLOGY

Anhalf bridge and double line frequency based transformer is utilized. The bridge rectifier performs the conversion of AC power excitation into an optimized DC, through the resistor and capacitor charging of RC. Two transistor Q1 and Q2of which Q1 starts conducting for one half cycle causing a current to flow into the primary coil from 1 to 2 .while in the other half cycle same process repeats over with an opposite entry of current from 2 to 1 of the primary coil due to the conduction of transistor Q2.

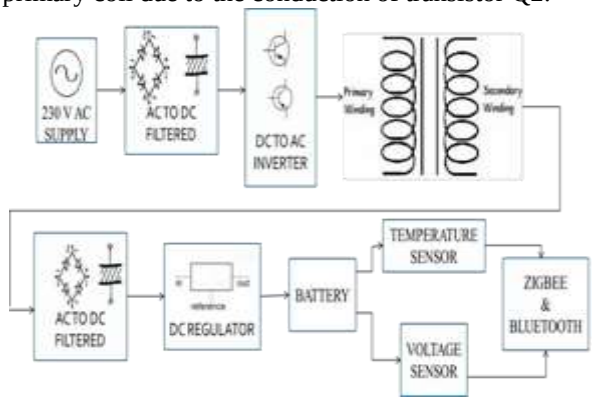

Fig.1 Block Diagram

The Fig.1 shows a general block diagram of the wireless charging circuit .An AC current of 25KHz is thus generated at the secondary coil by the cycle flow of current from 1 to 2 and 2 to 1 in the primary coil .The resulting action is being achieved due to the transistors as fast switching devices of high frequency.

The inducedVoltage in the secondary coil is fed to Four diodes based bridge circuit of rectification and DC thus generated as a course of actionis filtered by an electrolytic capacitor of about 1000microfarads. IC LM7805 is used to get 5v constant DC voltage for regulation of the filtered signal at its output pin irrespective of the varying DC voltage ranging from 9V to 14V.

A small electrolytic capacitor(10 micro farad) is used as a filter again to regulate the DC voltage amplitude. Even the signal noise thus generated can also be used for charging the battery. An LED accompanied by a 330 ohm resistor is connected at the supply point for . The input direct current is used for other applications as on when required. The 12V battery is charged by the rectifier's output.

Now the battery gets charged and the value of the battery voltage is found using a voltage sensor. Since the battery gets heated up while charging, a temperature sensor is used to indicate the abnormal temperature values. Voltage sensor plays a vital role since it is useful to find how far the charging must be done.

Revised Manuscript Received on September 14, 2019.

A.Sadeesh Kumar, Department of Electronics and Instrumentation Engineering, St,Joseph's College of Engineering, OMR Chennai,TamilNadu, India.(Email: sat22ish@gmail.com)

N.Hariprasad, Department of Electronics and Instrumentation Engineering, St,Joseph's College of Engineering, OMR Chennai,TamilNadu, India.

Mr.N.Sivabalan, Department of Electronics and Instrumentation Engineering, St,Joseph's College of Engineering, OMR Chennai,TamilNadu, India.

D.Jacob Joshua, Department of Electronics and Instrumentation Engineering, St,Joseph's College of Engineering, OMR Chennai,TamilNadu, India.

J.Sriram, Department of Electronics and Instrumentation Engineering, St,Joseph's College of Engineering, OMR Chennai,TamilNadu, India.

The sensed voltage and temperature values can be viewed in a computer using ZigBee transmitter and receiver else the values can also be viewed in mobile phones by pairing the mobile with the Bluetooth chip. Thus this method is very reliable and safe.

III. RESULT AND DISCUSSION

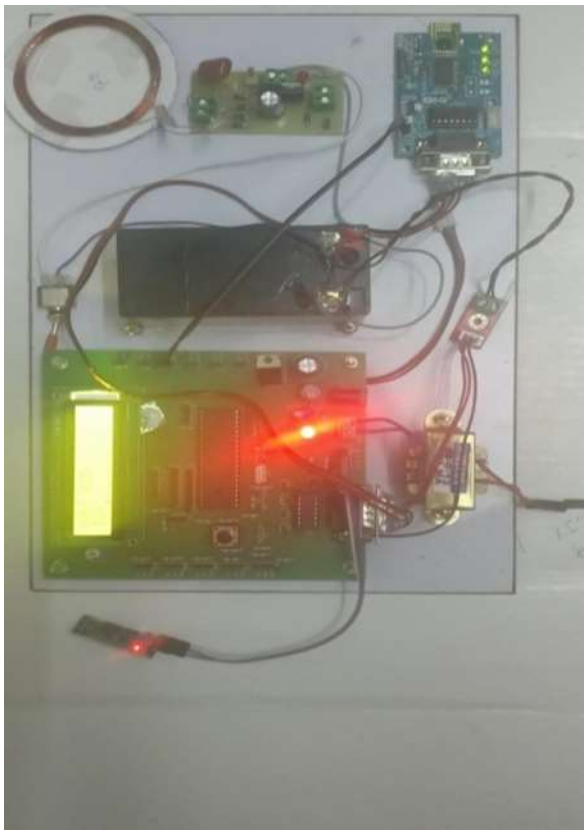

Fig.2 Overall setup

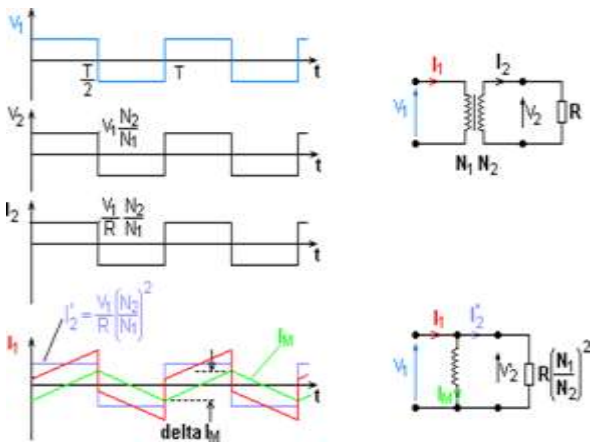

In order to keep the magnetizing current low, a core without an air gap is designed to be used in order to maintain it as low as possible.V1 represents the primary voltage at the transformer which is the primary reason for causing an input current I1 and Imto flow.

A triangular shaped magnetizing current Imcan be seen in the above fig caused by the square wave voltage at the transformer's input side.This magnetizing current Im is atmost independent of the current in the secondary and also proportional to the magnetic flux i.e to B the magnetic flux density.V1 – the input voltage determines the flux associated with the transformer and is given by faraday's law as given below.

V1 = N * d (Φ)/dt.

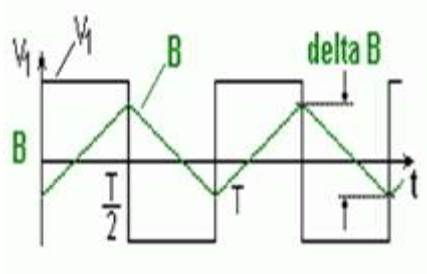

Fig.4 waveform analysis 2

Rectification a process of converting an alternating current (AC) to rippled direct current (DC) and is done by the rectifier. The current from the rectifier will flow in a single direction and might carry some ripples in it.The usage of the rectifiers include as the integral component of the power supplies and also function as radio signal detectors. Diodes(Made of solid state devices) makes the rectifier circuit are used preferably. It may also be made up of vacuum tube based diodes, Mercury arc valves and other components. The output from the transformer is directly fed to the rectifier and may include a capacitor. Pulsating DC originates from the Rectifier after a successful AC conversion. The rectifier may be a half wave or a full wave rectifier. In this project, a bridge rectifier is used because of its merits like good stability and full wave rectification.

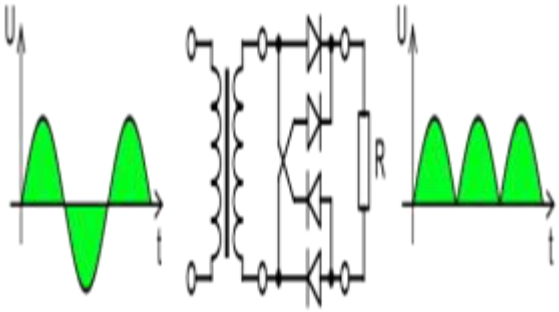

Fig.5A 4 diode -Full wave Rectifier

Two diodes are connected back- to-back for a single-phase AC, if the transformer is centre-tapped, (i.e. anode-to-anode or cathode-to-cathode) will form a full-wave rectification. Secondary to primary ratio will be twice to obtain the similar output voltage compared to the bridge rectifier as considered above .

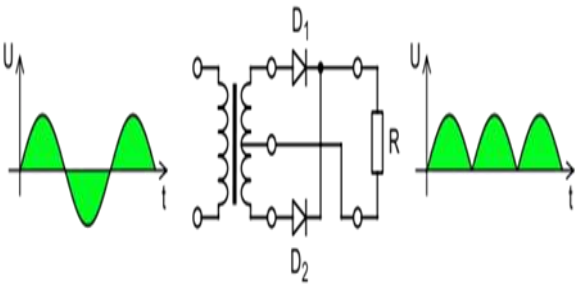

Fig.6A center taptransformer based Full wave rectifier and 2 diodes

Capacitive filter is used to remove the unwanted noise or ripples from rectifier's output and smooth the DC .As the mains voltage and load is maintained constant the output from the capacitive filter will also remain constant. However, D.C. voltage received at this point changes as if either of the two is varied. Therefore a regulator is applied at the outputstage.

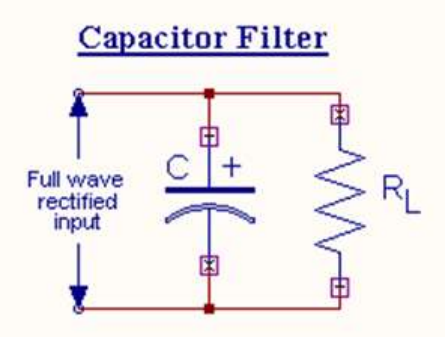

Fig.7Capactive Filter

IC16F877A is used as Microcontroller in this project because of its various special features and advantages over other microcontrollers.Some features are

- Flash Memory: 14.3 Kbytes (8192 words)
- Data SRAM: 368 bytes
- Data EEPROM: 256 bytes
- Watchdog Timer with on-chip RC oscillator
- Power-saving Sleep mode

ZigBee as one of the wireless technologies developed as an open global standard will meet up the unique needs of low-power ,low-cost, wireless sensor networks. The standard makes use of the IEEE 802.15.4 physical radio specification and operates in an unlicensed bands worldwide at the following frequencies: 2.400–2.484 GHz, 902-928 MHz and 868.0–868.6 MHz

Fig.8Zigbee board

Blue Term is an android application available in Google play store, which can be used for viewing the values of the sensors that are connected to the Microcontroller.The values sensed by the sensors are sent to the Microcontroller. The sensed value is transferred via Bluetooth chip. The mobile with this application must be paired with the Bluetooth which is connected to the microcontroller in order to view the sensed value in blue term terminal (mobile).

Fig.9Blue Term Android application

With the help of magnetic induction we can charge the battery which is present in the pacemaker by the wireless power transfer.With the help of temperature sensor we sense the heating rate of the pacemaker. With proper guidance of the doctors we can thus easilyemploy this method for heart patient's. Wireless Power Transmission could be the solution to eliminate traditional charging systems in place and could be served as a viable replacement. Instead of plugging onto a power chord for charging the battery in a mobile phone or laptop, wireless power transfer can be designed and implemented in a home such that a laptop and phone made to charge continuously without the need for plugging anything in. This concept can also be used in places. where it is difficult and impossible to use wires. It can also be used in propeller clocks , iPods etc.

Fig.10Setup With Magnetic Induction Coil

The main objective of this project is to develop a wireless power transfer device using ZigBee and Bluetooth to avoid periodic operation procedures for battery replacement thereby ensuring reliability.The voltage level of battery and its temperature is monitored in real time, so that, the safety of the patient is ensured.This project is carried out for charging the battery of the pacemaker which is implanted in the patient's body.

IV. CONCLUSION

We have designed a circuit which is more reliable and safe for charging the battery of a pacemaker that is implanted inside the patient's body. Thus the main objective of this project has been developed and implemented successfully. This is very useful as the patient will not be subjected to any physical pain and they need not waste their time by getting operated. Since pacemakers use a maximum of 400mAh batteries, charging of such batteries wirelessly will not affect the patients at any cause. Thus the patients can charge their pacemaker batteries on their own without any risk or fear.

REFERENCES

1. Nicola Tesla,"The transmission of electrical energy without wires, Electrical WorldandEngineer,March1905.http://www.tfcbooks.com /tesla/1904-03-05.htm, (acc. Dec. 08).
2. William C. Brown, "The history of power transmission by radio waves", Microwave Theory andTechniques, IEEE Transactions, 32(9):1230-1242,eptember1984.
3. Wireless Power Consortium,Qi SpecificationVersionwirelesspowerconsortium.com/deve lopers/specification.ml
4. D. Ahn and S. Hong, "A transmitter or a receiverconsisting of twoStrongly coupled resonators for enhanced resonant coupling in wirelesspower transfer," IEEE Trans. Ind. Electron. to bepublished.
5. P. Cong, N. Chaimanonart, W. H. Ko, and D. Young, "A wireless and batteryless 10-bit implantable blood pressure sensing microsystem withAdaptive RF powering for real-time laboratory mice monitoring,"IEEE.