Design of Intelligent Transport System using PIC16F877 Microcontroller

SaravananRajaram, N.Chandrasekaran, S.SuryaPrakash

***Abstract:** In this fast moving world, people are in a real haste to move to their desired destination at no time. This makes them to drive the vehicles fast and many times it results in road accidents and invaluable life loss. These road accidents are due to traffic signal violation, rash driving of vehicles. In order to avoid such road accidents, we have proposed an Embedded based Vehicle Motion Control system. This enables the vehicles to be run at controlled speeds depending upon the nature of the area the vehicle crosses. Also, drunken driving is strictly prohibited. This adds safety to the drivers and also to the public people. Our Proposed system consists of PIC 16F877A microcontroller, RF transmitter and RF receiver modules. The RF transmitter unit will be found along with the traffic signals and also in school, hospital, temple zones, etc. The RF receiver unit will be found in the vehicles. RF transmitters transmit signals which will be processed by the microcontroller unit enclosed with the receiver unit and it controls the speed of the vehicles when they reach the respective zones.*

***Keywords:** RF Transmitter, RF Receiver, Vehicle, Transport System, Microcontroller.*

I. INTRODUCTION

In the advanced world, one of the most exceedingly awful situations is street fatalities. Street fatalities are a noteworthy worry in human life. Ongoing investigations demonstrate that 33% of the quantity of lethal or genuine mishaps is related with unreasonable or wrong speed of the vehicles, and also changes in the street way (like the nearness of street work or surprising deterrents). Decrease of the quantity of mishaps and relief of their results are enormous worry of traffic specialists, the car business and transport examine gatherings. People on foot particularly school youngsters are the most powerless traffic members, since they are regularly truly harmed in car crashes. Thus, a vehicle movement control framework is the arrangement, which are acoustic or visual signs created by the zones to control the vehicles dependent on the zones. These propelled frameworks show that the higher security will be accomplished via programmed driving signs and a developing number of sensors both out and about, at clumsy zones and within the vehicle. In any case, the employments of the framework are out of commission where abnormal street conditions, for example, street work, street redirections, mishaps and so on.RF modules not just utilized at instructive organizations, may likewise be put any spots where the need exist to caution the driver.

While fake vision based acknowledgment of traffic signs may fizzle if perceivability is poor, deficient light, troublesome climate conditions or hindering of the observable pathway by going before vehicles, RF signs may in any case be transmitted dependable. This work is to concentrate primarily the use of PIC 16F877A microcontroller. Comparable sort of work has done by Joshua Perez, where they utilized RFID labels for the application to control the speed of the vehicle. Radio recurrence (RF) is a rate of swaying in the scope of around 30 kHz to 300 GHz, which compares to the recurrence of electrical flags typically used to create and recognize radio waves. RF sensor module is solid with its high separation inclusion and practical..

II. EXISTING SYSTEM

The current framework investigates the likelihood of giving traffic control motions through radio recurrence (RF) transmission or by different methods for remote information correspondence and in this manner diminishes street mishaps. Extra preferences are diminishing the vehicle speed or ceasing vehicle at speed breakers and traffic signals. This framework whenever received by some state can successfully decrease the quantity of street mishaps caused by speeding vehicles losing control of the vehicle at speed breakers or by driver's carelessness towards traffic signals. The essential model of this framework comprises of a microcontroller controlled RF handset module, electronic controller unit (ECU) utilized in vehicles. In the framework proposed the traffic sign sheets including control signals are supplanted with RF transmitters transmitting the predefined coded information (about the traffic motion) for the traffic control beneficiary unit incorporated in the vehicle where the collector unit is associated with the ECU and to show unit on the dashboard of the vehicle which on coming in region of the specific traffic flag, transmitter begins showing the plain traffic motion on the showing unit. In the event that the driver does not react to the flag and abuses it, the controller unit takes control of vehicle transmission and plays out the predetermined activity. The drawbacks of existing system are as follows

- ✓ Accidents due to fog are not resolved.
- ✓ System installation in all vehicles is costly.
- ✓ Vehicle is immediately stopped in the signal, leading to loss of control for the driver.

Revised Manuscript Received on December 08, 2018.

SaravananRajaram,Assistant professor,Department of EEE, PSNA College of Engg& Tech, Dindigul, Tamilnadu, India

Dr.N.Chandrasekaran, Professor & Head (UG),Department of EEE, PSNA College of Engg& Tech, Dindigul, Tamilnadu, India

S. Surya Prakash, Assistant Professor,Department of EEE, Kumaraguru College of Engg& Tech, coimbatore, Tamilnadu, India

Published By:
Blue Eyes Intelligence Engineering
& Sciences Publication

III. PROPOSED SYSTEM

The system proposed here is to mainly overcome the drawbacks of the existing system and it also has some added features. It consists of similar RF transceivers which control the speed of the vehicles in two stages which will help the driver realize that his vehicle is being controlled by the traffic signal. In addition to this, we add extra features to the system like zone based speed control system and fog detection mechanism. The main advantage of our proposed system is that the traffic signals are not replaced; instead they are kept as it is and the RF transmitters are kept in the traffic signal posts and at various zones. These transmitters transmit the required signals to control the motion of the vehicle. This enhancement helps the pedestrians to be aware of the traffic signals and it plays significant role in avoiding road accidents.

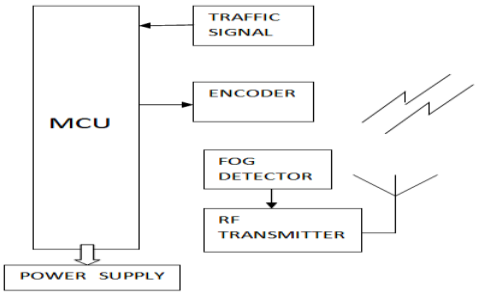

Fig.1 Transmitter Section

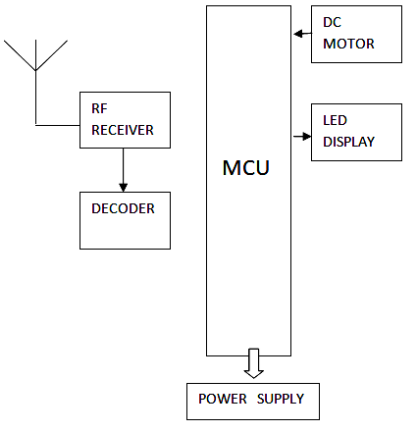

Fig.2 Receiver Section

The transmitter and receiver section of the proposed system is shown in Fig. 1 and Fig. 2. This block diagram consists of transmitter and receiver blocks. Both the transmitter and receiver are interfaced to separate microcontrollers. At Transmitter, a Traffic signal post, Zone signal post is interfaced to micro controller unit and a Fog detector is used to determine the presence of Fog. Depending upon the traffic signal microcontroller will send pulses through RF transmitter. At receiver, microcontroller is interfaced to RF Receiver. Depending up on the signal received, the MCU controls the vehicle. An alert system (LCD) also interfaced which shows the zones and the status of vehicle speed.

IV. HARDWARE DESCRIPTION

A. PIC Microcontroller

Peripheral Interface Controllers (PIC) is one of the propelled microcontrollers created by microchip advancements. These microcontrollers are broadly utilized in current gadgets applications. A PIC controller incorporates all kind of cutting edge interfacing ports and memory modules. As like ordinary microcontroller, the PIC chip likewise joins a Microprocessor unit called CPU and is coordinated with different sorts of memory modules (RAM, ROM, EEPROM, and so on), I/O ports, clocks/counters, correspondence ports, and so forth. All PIC microcontroller family utilizes Harvard engineering.

B. LCD Display

LCD display module is an exceptionally fundamental module and is generally utilized in different gadgets and circuits. These display modules are favored more than seven portions and other multi-section LEDs. The reasons being: LCDs are sparing; effectively programmable; have no restriction of showing exceptional and even custom characters (not at all like in seven segments), activities, etc.

C. RF Module

Transmission through RF is superior to IR (infrared) due to numerous reasons. Right off the bat, motions through RF can go through bigger separations making it appropriate for long-range applications. Additionally, while IR, for the most part, works in viewable pathway mode, RF signs can travel notwithstanding when there is an obstacle between transmitter and collector. RF correspondence utilizes an explicit recurrence, not at all like IR signals which are influenced by other IR producing sources This RF module includes an RF Transmitter and an RF Receiver. The transmitter/beneficiary (Tx/Rx) combine works at a recurrence of 434 MHz. An RF transmitter gets sequential information and transmits it remotely through RF through its receiving wire associated at pin4. The transmission happens at the rate of 1Kbps - 10Kbps. The transmitted information is gotten by an RF recipient working at indistinguishable recurrence from that of the transmitter. The stick setup of RF transmitter and collector is shown in Fig.3

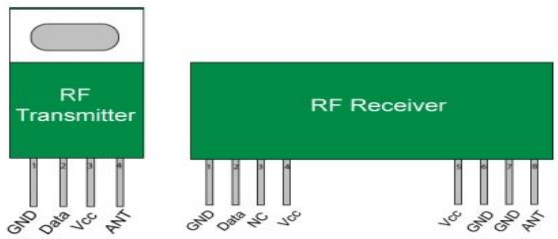

Fig.3. RF T/x and R/x Pin Configuration

The RF module is regularly utilized alongside a couple of encoder/decoder. The encoder is utilized for encoding parallel information for transmission feed while gathering is decoded by a decoder. HT12E-HT12D, HT640-HT648, and so on are some generally utilized encoder/decoder match ICs which is appeared in Fig.4.

The TWS-434 and RWS-434 are amazingly little, and are superb for applications requiring short-run RF remote controls.

The transmitter module is just 1/3 the measure of a standard postage stamp, and can undoubtedly be put inside a little plastic fenced in area.

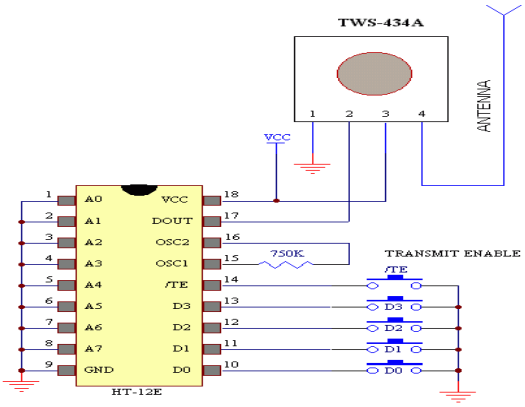

Fig.4. Simple Transmitter Circuit

V. HARDWARE SETUP OF PROPOSED SYSTEM

The Hardware set up of the proposed system is described as follows. Our proposed system consist of two main units namely

1. Zone unit 2. Vehicle unit

We have three important modules in our intelligent transport systems are as follows

- ✓ Traffic Signal Based Vehicle Control
- ✓ Zone Based Vehicle Control
- ✓ Foggy Road Detection And Control

A. Zone Unit:

In this unit, we have two switches to change the demo module, the right switch is used to ON/OFF the Traffic light module, and the left switch is used to ON/OFF the zone module is shown in Fig.5.

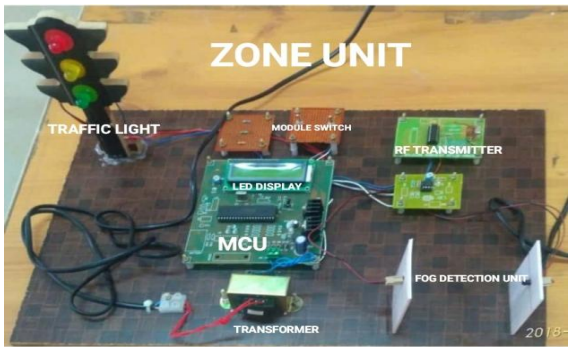

Fig.5. Zone Unit

B. Vehicle Unit:

The Vehicle unit has a DC motor and LCD Display. The MCU will control the speed of the motor according to the signal obtained from the Zone unit, and the LED display will displays the status of the vehicle is shown in Fig.6.

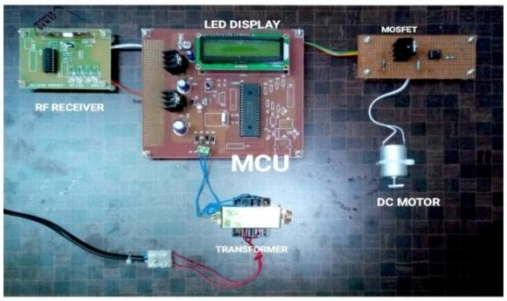

Fig.6. Vehicle Unit

The output of traffic signal module is shown in Fig.7, Fig.8, and Fig.9 respectively. In this Green Signal state, there is no control in the motor speed and in LED there is no output is shown in Fig.7

Fig.7. Green Signal Output

In this Yellow Signal state, there is no control in the motor speed and in LED there is no output is shown in Fig.8.

Fig.8. Yellow Signal Output

In this Red Signal state, speed of the motor is totally stopped and LED Display shows the output "RED LIGHT STOP is shown in Fig.9

Published By:
Blue Eyes Intelligence Engineering
& Sciences Publication

Fig.9. Red Signal Output

The output of Zone based control systems are shown in Fig.10.In zone module, when the vehicle goes into the targeted zone, the speed of the motor is automatically reduced. The respective LEDoutputs is shown in the Fig.10.

Fig.10. Output of Zone based Control

The output of FOG detection is shown in Fig.11. In this module, whenever the fog is detected near the zone unit, the speed of the motor is reduced and respective output is shown on both units of the system.

Fig.11. Output of Fog Detection

VI. CONCLUSION

This system is mainly proposed for avoiding road accidents. We have designed three modules as follows, Fog detective vehicle control, zone-based speed control, traffic signal speed control. Our system is a successful one. Signals transmitted from different zones and traffic signals are sensed by the receiver system installed in vehicles. The vehicle motion is controlled based on the signals that are detected by the receiver. Existing systems shows that the road accidents are prevented to an extent with some drawbacks added. Our system has eliminated those drawbacks, by including traffic signal and zone alert in the vehicle and on the roadside and the system is cost effective too. By this concept, road accidents are avoided to a considerable extent better than the previous speed and motion control systems. It can be completely eradicated if the public is aware of road rules and highly cautious about the one and only life given to them.

REFERENCES

1. LEONARD, John, et al. A perception-driven autonomous urban vehicle.Journal of Field Robotics, 2008, 25. Jg., Nr. 10, S. 727-774
2. Pomerleau, D., "Visibility estimation from a moving vehicle using the RALPH vision system", IEEE Conference on Intelligent Transportation System, 1997. ITSC '97, pp. 906-911, 9-12 Nov 1997.
3. N. Hautiere, D. Aubert, "Contrast restoration of foggy images through use of an onboard camera, " Intelligent Transportation Systems, 2005. Proceedings.2005 IEEE, pp.601-606, 13-15 Sept. 2005.
4. Tan, R.T., "Visibility in bad weather from a single image", IEEE Conference on Computer Vision and Pattern Recognition, 2008. CVPR 2008, pp.1-8, 23-28 June 2008.
5. W. Middleton, Vision through the atmosphere. University of Toronto Press, 1952.
6. Pavlic, M.; Belzner, H.; Rigoll, G.; Ilic, S., "Image based fog detection in vehicles", Intelligent Vehicles Symposium (IV), 2012 IEEE, pp.1132- 1137, 3-7 June 2012.
7. "Urban Mobility Report, Texas Transportation Institute, Texas A&M University, " 2007.
8. B. Coifman and M. Cassidy, "Vehicle reidentification and travel time measurement on congested freeways, " Transportation Research Part A: Policy and Practice, 2002.
9. L. Li, L. Chen, X. Huang, and J. Huang, "A traffic congestion estimation approach from video using time-spatial imagery, " in Proceedings of the 2008 First International Conference on Intelligent Networks and Intelligent Systems, 2008.

B. Eleryan, M. Elsabagh, and M. Youssef, "Synthetic generation of radio maps for device-free passive localization, " in IEEE Globecom, 2011.

1. Mengxianghai, Shi yongyi, Wang hao. Speed distribution characteristics and speed limits of freeway work zones[J]. Journal of Transportation Systems Engineering and Information Technology, 2013, 2 (13): 150-155.
2. James Migletz, Jerry L. Graham. Work zone speed limit procedure[C]. Washington D.C.: Transportation Research Board, 1999: 24-30.
3. Fudala, Nicholas J, Fontaine,Michael D. Interaction between system design and operations of variable speed limit systems in work zones[J]. Transportation Research Record, January 2010, 1-10.
4. Nicholas J Fudala, Michael D Fontaine. Interaction between system design and operations in work zone variable speed limit systems[C]. Washington D.C.: Transportation Research Board, 2010: 24-30.
5. Lee C, Hellinga B, Saccomanno F. Evaluation of variable speed limits to improve traffic Safety[J]. Transportation Research Part C, 2006, 14 (3): 213-288
6. R. MarudhachalamandGnanambalIlango, "Fuzzy Center Weighted Hybrid Filtering Techniques for Denoising of Medical Images", International Journal of Fuzzy Mathematics and Systems, ISSN 2248-9940 Vol. 2, No. 4, pp. 383-390, 2012.
7. V Nandhini, K Ramprakash Power Reduction by Flip Flop Merging Technique Using Heuristic Algorithm - Software Engineering and Technology, 2015
8. R. Mahalakshmi, A. Kumar, A. Kumar, "Design of Fuzzy logic based maximum power point tracking controller for solar array for cloudy weather conditions", IEEE power and energy systems: towards sustainable energy, pp. 1-4, 2014.

Published By:
Blue Eyes Intelligence Engineering
& Sciences Publication