International Journal of Innovative Technology and Exploring Engineering (IJITEE)
ISSN: 2278-3075 (Online), Volume-8 Issue-4, February 2019

# An IoT Detection of Milk Parameters using Raspberry PI and GSM for Diary Farmers

**K. Haribabu, Ch. Umashankar, S.V.S Prasad**

***Abstract:*** ***The Raspberry pi development board controller which based to measure some of the parameters. It will be very simple to measure the milk parameters of ph value fat and CLR value. The ph detector it will detects the ph value levels in the milk and similarly in the same way the lactometer will measure how the milk purity obtained. The milk purity will be studied deeply by purely qualitatively quantitatively. In this domain the sensors will be interfaced to the raspberry pi controller. Every farmer will have Rfid interface user id and it will be connected to farmer mobile number by the gsm module. The measured parameters of milk will be sms to the connected to the farmer mobile number. The measured content will be uploaded to the webpage through internet using the gprs with date and time it will be displayed in the lcd monitor. It can be a coffee price and economical tool to sight purityness of the milk. With the assistance of GSM and GPRS method the milk can be easily traded and reading parameter information of milk will be sent to the govt so it will be helpful to the govt about the illegal things can be overcome such as milk impurity. The farmers swipes RFID the cardboard it reads the Milk parameters like pH worth CLR and every RFID coupled with various farmer mobile variety, once mensuration done of the Milk parameters SMS the parameters information to the farmer. By exploitation the GPRS technology the knowledge will transfer to the server for the longer term analysis and records.***

***IndexTerms: Raspberry Pi, Rfid Reader Module, GSM Module, Ph Sensor, CLR(Corrected lactometer Reading), IOT(Thing speak).***

## I. INTRODUCTION

In measure fat content we've used the principle of optical scattering of sunshine by fat globules gift within the homogenized milk therefore amusive wholly from the same old methodology of separating the fat by burning it with acid, centrifuging it and measure on a mark scale. In measure the particular gravity of the milk or the CLR the essential principle of ancient methodology i.e. employing a lactometer is preserved, but the observation of lactometer reading created exploitation physics is a lot of most popular.

In recent years, the farming in Ningxia has become a pillar business of the regional agriculture and also the rural economy, and its development is extremely fast. Whereas Ningxia is found in north western China, the agricultural economy and its breeding strategies of placental mammal Park area unit comparatively backward and its information nization level is low. As a result, As a result, it's troublesome for the breeding park to implement the data of feeding and management. These reasons have seriously affected the economic advantages of breeding park, so the native farmer's financial gain grow slowly, and Ningxia animal husbandry's additional development has been severely forced. Ningxia because the solely Hui Autonomous Region in China, the enterprises in Breeding Park offer halal milk for Ningxia province, so farming management is that the core of the enterprises' internal management. The amount of information nization and management area unit directly concerning the enterprises' economic interests and social advantages. With the deepening of the country's financial set-up reform, new and better necessities area unit projected to production and management work of farming enterprise. With the speedy development of engineering and also the increasing maturity of golem mobile devices, all of those offer technical support for developing advanced and sensible Android-based management system designed for farm farms. The event of this method can considerably improve the breeding farm enterprise information nization level and management level; therefore it will effectively improve the potency of the breeding enterprise production.

## II. PROPOSED METHODOLOGY

Now a days the milk adulteration is major issue playing important role. In these project I proposed that this is the new implementation to detect the parameters of milk purity such as ph value CLR(corrected lactometer reading). For the upcoming newer technology the parameters of milk can be uploaded to the server webpage and the details of parameters will be sms to the connected mobile number through the gsm/gprs technology. In present these days the milk impurityness will be happening very high. Using these technology so the milk content purity will be uploaded to web server so it can helpful to the government to avoid the illegal things which happening the milk purityness is going on decreasing so to avoid these type things it will be very helpful.

**Manuscript published on 28 February 2019.**
***Correspondence Author(s)**
**K.Haribabu,** ECE Department, MLR Institute of Technology ,Hyderabad ,India.
**Ch.Umashankar**, ECE Department, MLR Institute of Technology, Hyderabad, India.
**S.V.S Prasad**, , ECE Department, MLR Institute of Technology ,Hyderabad ,India.

## III. III HARDWARE IMPLEMENTATION

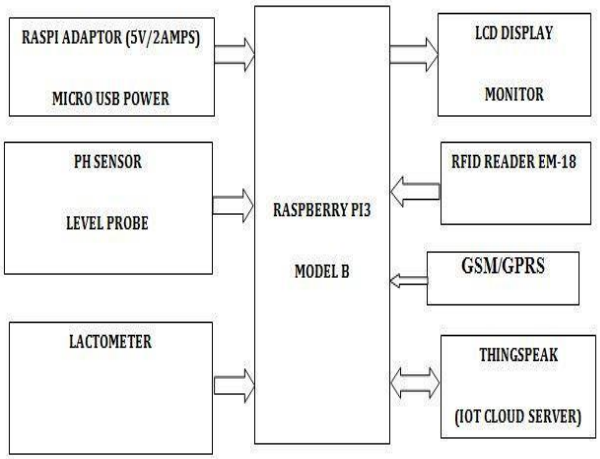


**Figure 1 Block Diagram**

Raspberry Pi is a small board which acts as computer and it is developed by Raspberry pi foundation of United Kingdom. The Raspberry Pi board is coupled with 1gb of ram and it contains no internal memory so operating system needs to be separately installed in external SD card.[1]The board is powered by a Noobs operating system which is developed based on Linux. The Ph sensor and the lactometer to measure the milk parameters and it will be given to the raspberry pi board. From taking the inputs to the raspberry pi of gpio pins it will be processed the parameters that will displayed in the liquid crystal display monitor. The milk parameters will be uploaded to the Internet through thingspeak IOT. These process of technology is very safe secure to overcome from the illegal things we assign a RFID user module when shows the rfid card it will displays to do for further process.

## IV. DESIGN METHODOLOGY

**PH Sensor:**

A Ph scale which consists of 14 levels seventh level which indicates a neutral. Pure water will concentrate the ph value is neutral . Now the ph value indication is below the seventh level is in acidic medium whereas the ph value is above the seventh level which is in basic medium . The ph scale probe which passes the electrical signals and it will displays the reading units. Some of the ph scale will have two separate probes one should be sensing the glass element conductor and the other is reference conductor. Both of the sensing conductors will measures the ph scale the gas ions concentration should be lose to tip of skinny glass bulb. Here in this the acidic and basic concentration level gas ions of milk should be measured with these ph scale meter and displays the resultant ph value

**Lactometer:**

There area unit countless substances that create milk impure and that we will check or take a look at that impure milk through lactometer.

**Figure 3 Lactometer**

**Working of Lactometer:**

Lactometer, a cylindrical vessel created by processing a glass tube. One facet of glass tube looks like a bulb with stuffed by mercury and another facet is skinny glass tube. For milk testing. lactometer unfit in milk that wehave a tendency to area unit testing. In lactometer the purpose up to that it sinks in.

The pure milk is marked subsequently place in water and marked at the purpose up to that it sinks in water. It sinks less in milk then water as a result of as we all know milk is denser then water. At lactometer there are a unit to parts i.e. ‘M ‘and ‘W’ that is split in 3 components and marked as 3, 2 and 1. That indicates the amount of the purity in Milk

**GSM/GPRS**

Gsm which means the global network for mobile communication and similarly gprs general packet radio services. By the gsm/gprs technology we can able to connect to the internet through wifi. using gsm the milk parameters can be easily shortly sms to the connected farmer mobile number. A sim is inserted into the gsm module with some internet and sms balance so connected sim will be active and through that sms balance sms will be sent to the farmer connected mobile number through the rfid module.


Published By:
Blue Eyes Intelligence Engineering
and Sciences Publication (BEIESP)

**Figure 4 : GSM**

## V. EXPERIMENTAL RESULTS

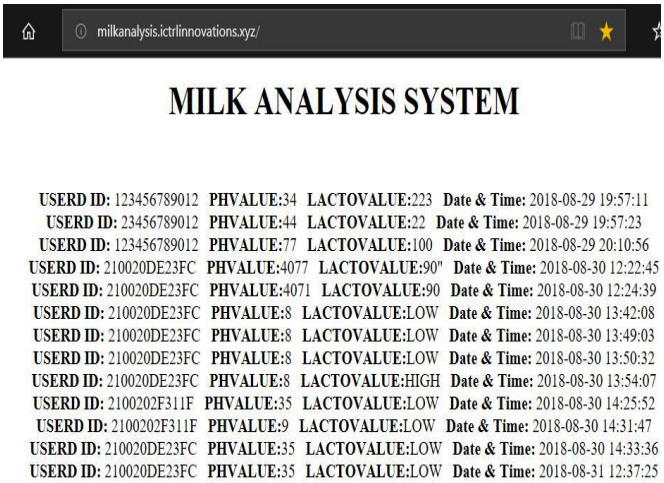


**Figure 5 Milk Analysis System Web Page**

The above resultant figure which shows the output webpage of milk detection parameters. It will be displayed along with user IDs the detected parameters of milk ph values and lactometer values along with date and time. To display the milk quality first of all we should create the thingspeak user account and login to the webpage site. The site thingspeak will be free to use as an internet things purpose. To upload the milk parameters content we need a GSM sim with internet balance in the GSM module. with the WIFI network present in the raspberry pi we can able to connect the internet through the wifi mobile hotspot internet can be shared. The measured parameters of milk content will be displayed in the liquid crystal display monitor connected through the Cpu VGA cable . After connecting VGA cable the noobs os will be boot up and welcome to raspberry pi scrolling will be appeared in the Lcd display monitor.

## VI. CONCLUSION

The main aim of these project develops the less value economically the detection of milk parameters using the sensors lactometer. It will mainly measures the purity of the milk by quantitatively and qualitatively. In these it will measures the ph and corrected lactometer value. The developed system will be very small in size and it will be less weight with maintains low power consumption and it will responds fast which is secured the data will not loss it will be present for more days. In this paper we've an inclination to develop a system that provides faster and tons of correct output. Because of system user get precise amount as per the quality and quantity of milk. Use of ID makes the system safer for user and it will be managed info are getting to be hold on and can be merely access. The project developed is nice a mixture of bio-chemistry and natural science engineering. The milk assortment analysis such as weight, Fat & Clr unit measured by this technique provides same output as a result of the present systems that unit tons of high-priced than the developed one.

## REFERENCES

1. Prof. S.V. Arote, Prof. S.B. Lavhate, Prof. V. S.
2. Phatangare, "Low value Milk Analyzing and asking System victimization Electronic Card", International Journal of Computer Technology and physical science Engineering-Volume two, Issue 2.Page no 5 to 13.
3. Sheryl S. Chougule, Mahesh S. Kumbhar, "To Develop processing System for farm Auto ----mation",International Journal of engineering and Electronics Engineering and Science Vol.No.05, May 2016.
4. Kejal monarch, Rajeshri Kelkar, Amruta fish genus, M .S. Chavan, "Photometric primarily based Sensor for Fat Detection in contemporary Milk", International Journal of Innovative Research in pc and communication Engineering.vol 3,Issue 4,April 2015.
5. Prof.A.S.Mali1, Arena A. Chougale, "Low Budget
6. System for measure of Milk Parameters and asking forDairy" SSRG International Journal of Electronics and Communication Engineering – Volume two, Issue 5, May 2015.
7. Ropak Chakravarty, a paper on IT at Milk Collection centres in cooperative Diaries:The National Dairy Development Board Experience,pp 37-47.

## AUTHORS PROFILE

**K. Hari Babu**,Associate prof in dept of ECE,MLR Institute of technogy,Hyderabad,India.

**C.H.Uma Sankar**,Associate prof in dept of ECE,MLR Institute of technogy,Hyderabad,India.

**Dr.SVS. Prasad,M.Tech.,Ph.D.,**Professor & Head, Department of ECE, MLR Institute of Technology,


*Published By:*
*Blue Eyes Intelligence Engineering and Sciences Publication (BEIESP)*