International Journal of Innovative Technology and Exploring Engineering (IJITEE)
ISSN: 2278-3075 (Online), Volume-9 Issue-1, November 2019

Design And Fabrication Of Flood Barrier For Domestic Usage At The Doorframe

Johan Ihsan bin Mahmood, Muhammad Farhan Daud, Pranesh Krishnan

Abstract*: There are many types of flood barrier, but commonly used are sandbags as it is the easiest to get as well fixed type of flood barrier. The problem with sandbags and fixed type flood barrier is sandbagged will get messy, and a hassle after the flood water has been receding while fixed type flood barrier only can be used on one side of doorframe. Therefore, this project tries to create a new design that will solve both problems by using Solidworks software. Result of this project showed what the effect on the structure design when the maximum force was applied. Some of parts in the invented flood barrier are working as intended.

Keywords: Design, doorframe, flood barrier, structure analysis, self-locking threads.

I. INTRODUCTION

Every time there was a monsoon season, there will be flood occurring in that particular area. One of the alternatives was using a flood barrier to stop the water from entering the house. There is much design of the flood barrier, but most commonly used design is a pure sandbag which piling on top of each other, and it works as a barrier between water and dry area. Although, correctly filled and placed sandbags can act as a barrier to divert moving water around, instead of through, buildings, sandbag construction does not guarantee a water-tight seal. Due to this limitation of the sandbags, there is a need for a new design of flood barrier, which is more useful to solve the problem.

II. LITERATURE REVIEW

In order to gather all the available sources related to Design and Fabrication of Flood Barrier for Domestic Usage at Doorframe, there is a need to review of the previous study related to flood barrier and some others mechanism that might help in designing and fabricating the flood barrier.

Revised Manuscript Received on November 30, 2019.
***** Correspondence Author
Johan Ihsan Mahmood*, Mechanical Section, Universiti Kuala Lumpur Malaysian Spanish Institute, Kulim Hi-Tech Park, 09000, Kulim, Kedah, Malaysia.
Muhammad Farhan Daud, Student, Bachelor of Engineering Technology in Mechanical Design, Universiti Kuala Lumpur Malaysian Spanish Institute. Kulim Hi-Tech Park, 09000, Kulim, Kedah, Malaysia.
Pranesh Krishnan, Intelligent Automotive Systems Research Cluster, Electrical Electronic and Automation Section, Universiti Kuala Lumpur Malaysian Spanish Institute, Kulim Hi-Tech Park, 09000, Kulim, Kedah, Malaysia.

There is five significant themes which will emerge throughout literature reviewed. These themes are calculation of floodwater pressure, material selection, water-tight sealing, designs of the previous flood barrier and self-locking treads as a source of reference that is essential for this project.

A. Calculation of floodwater pressure

The floodwater mostly contains water that is overflow from the river or nearby drainage, so all the calculation and formula is based on liquid pressure and its hydrostatic force because of the velocity of the floodwater is can be neglected because of its minimal influence to the overall pressure of water. The pressure is defined by the total force acting on a given area. It units is 〖N/m〗^2 or simply uses Pascal, Pa from the derived unit. The pressure is a static fluid at a depth h below the surface can be calculated by using formula (Çengel & Cimbala, 2006).

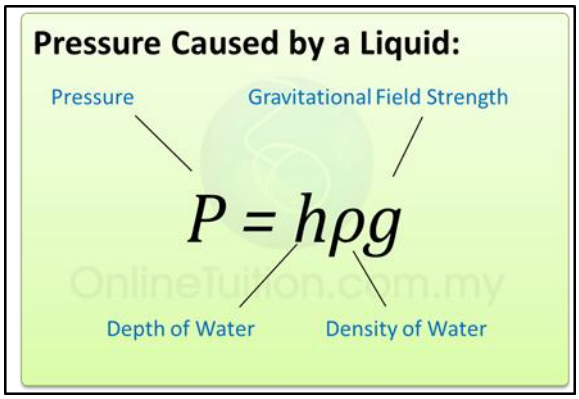

Fig. 1.Liquid pressure formula

B. Variation of pressure with depth

By using the analogy of "extra weight" on top of a layer each of the fluid, it is easy to imagine why the pressure is increasing with the depth of water. In constant density of fluid, the pressure difference between two points is proportional to the vertical distance between the points. In other words, pressure in a fluid increases linearly with depth.

C. Watertight sealing

Rubber has a low modulus of elasticity and is capable of sustaining a deformation. After such deformation, it quickly and forcibly retracts to its original dimensions. It is resilient and yet exhibits internal damping. Rubber can be processed into a variety of shapes and can be adhered to metal inserts or mounting plates. It can be compounded to have widely varying properties.

The load-deflection curve can be altered by changing its shape. Rubber will not corrode and requires typically no lubrication. (Ă, Bobancu, & Ţă, 2010).

D. Previous designs

Based on the design that has been patented (Data, Examiner, Alejandro, & Laurentano, 2009) the portable flood barrier section can be collapse, in order to enable compact storing when not in use. The invention of the flood barrier section to be located on a ground to form a barrier to prevent the floodwater from pass it, consist of an erectable wall which along one of its edges is hinged to the base of the design, the hinge enabling a rotating erection of the wall from an initial horizontal position to an erected position.

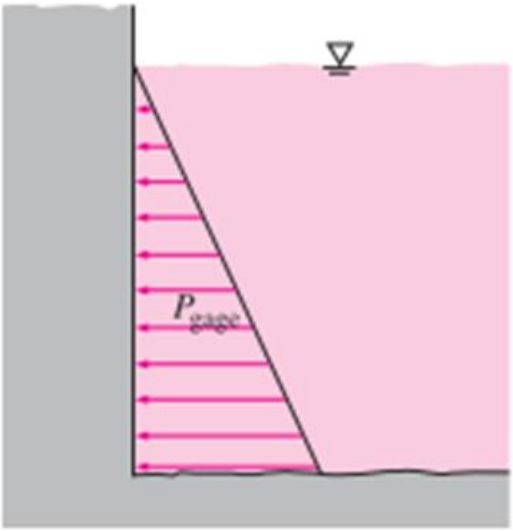

Fig. 2.Illustration of pressure against the depth of water

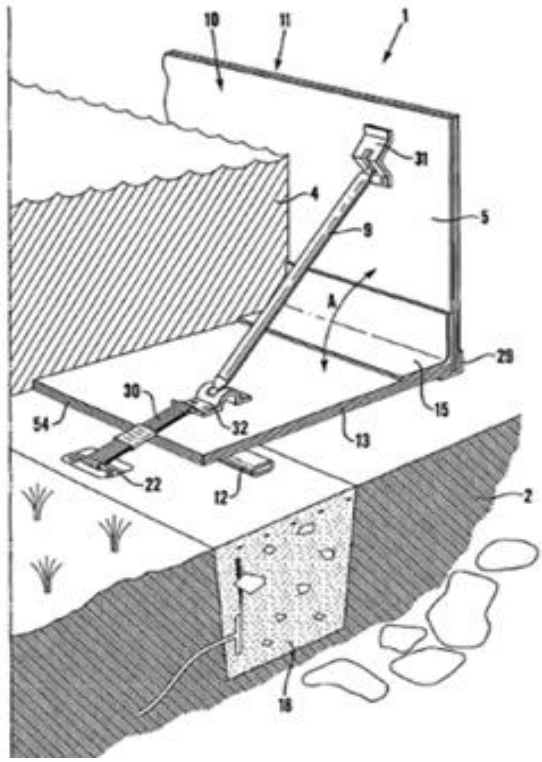

Fig. 3.Patent example of flood barrier (Data et al. 2009)

E. Self-locking property

"Self-locking", or it also called "non-reciprocal" or "non-overhauling" is caused by large frictional forces to the screws in practical use. (Hylton & Otoupal, 2005) state that these mechanisms can only be set in motion by force at the input, and when the input force is removed it will remain motionless, "locked" by friction at whatever position they were left. Self-locking will only occur if the screw efficiency is below 50%.

$$\eta \equiv \frac{F_{out}/F_{in}}{d_{in}/d_{out}} < 0.50$$

Fig. 4.The formula of efficiency (Hylton & Otoupal 2005)

III. METHODOLOGY

A. Designing process

This section will explain on how the process of the design from part to part. All the design was created by using Solidworks software. The scale of the design was 1:1, and all dimension was in millimetre.

B. Full assembly of the flood barrier design

Based on benchmarking and morphological chart, the best design has been decided which is that has been chosen. Figure 14 below shown the finalized confirmation of the design that has been decided with the additional design of the standard specification of doorframe and without doorframe in isometric view.

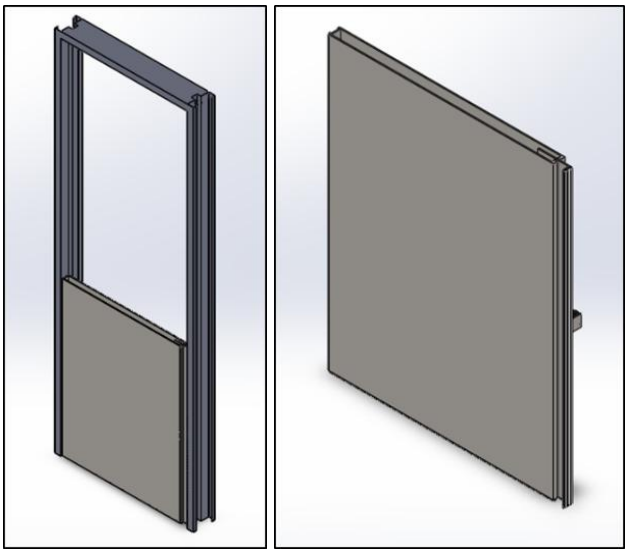

Fig. 5.Isometric view of the deisgn+ door frame (left) Design without doorframe (right)

C. Exploded view of the design

This will show all the component in the design slightly separated by the distance between each other from the intended full assembly. Figure 6 below shows the exploded view of the flood barrier that has been designed by using Solidwork.

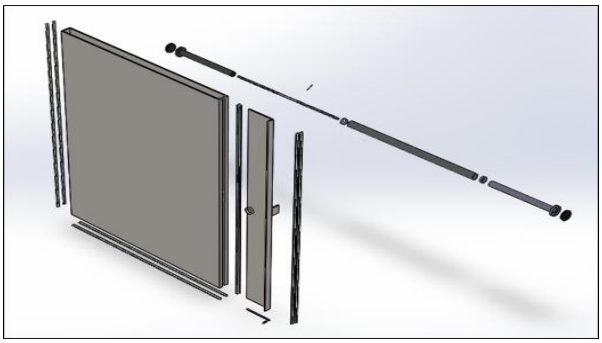

Fig. 6.Exploded view of the design

D. Section view of the design

This segment is about the section view of the flood barrier design. The focus of the section view is to show the point of contact between flood barrier and doorframe by cutting it from top plane. The cut from side plane will show off the hidden part of the flood barrier design. Figure 19 below shows the section view by cutting from the top plane while cutting from side plane can be seen in Figure 7.

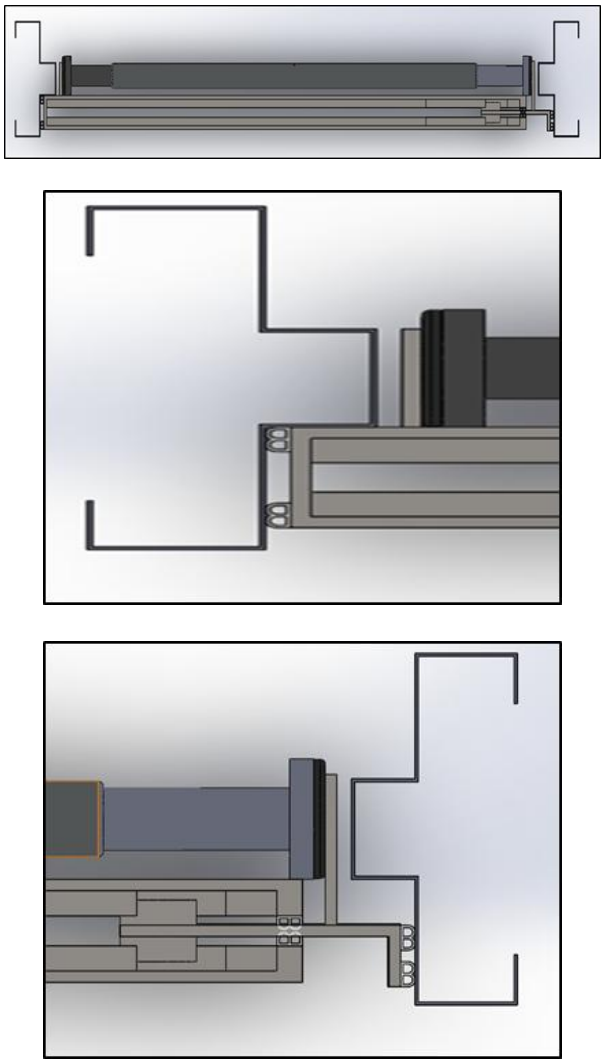

Fig. 7.Section view of the design (cut from the top frame)

E. Fabrication process

The fabrication process starts by gathering all the necessary material needed, for example, a mild steel plate with 4.5mm thickness and a hollow square bar. Next, the material was cut to appropriate size according to decided dimension following the scale of 1:3 to actual size. After that, the material was welded together to resemble the form of flood barrier in the design. All the excess material was grinded to adjust the dimension to exact size and make the surface smoother. Figure 8 below shown the marking to remove excess material and grinding process in progress will be shown in Figure 9

Fig. 8.Marking on excess material

Fig. 9.Grinding process

IV. RESULT AND DISCUSSION

A. Analysis result on the design

Figure 10 below showed the result of the structure analysis for mild steel in term of stress, strain and displacement when the maximum force, which is 9810 N was applied to the structure of the flood barrier. The pink arrow indicates the direction of the force applied while the thickness of the arrow indicates that the force applied like liquid pressure, so the force value at the top is almost negligible and at the bottom where the force value is high. Figure 11 shows the result of when aluminium alloy was used during analysis. Lastly, the result of changing the used material to stainless steel can be seen in Figure 12 below.

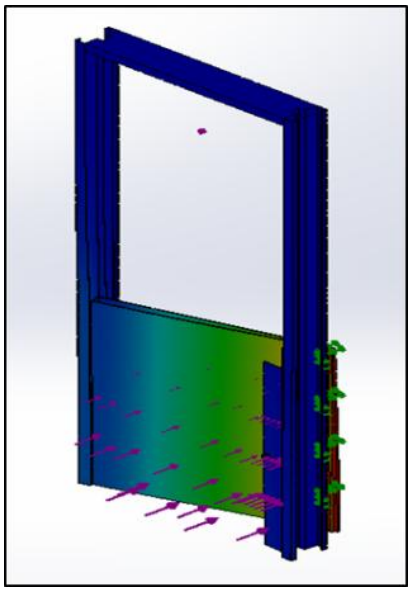

Fig. 10. Analysis design of the design

The contents of the journal are peer-reviewed and archival. The journal publishes scholarly articles of archival value as well as tutorial expositions and critical reviews of classical subjects and topics of current interest.

Table- II: Result when mild steel is used

	Stress (N/m^2)	Strain	Displacement (mm)
Highest Value	7.764e+008	5.540e-003	2.953e+001
Lowest Value	7.710e-001	3.393e-012	1.000e-0.30

Table- III: Result when the aluminum alloy is used

	Stress (N/m^2)	Strain	Displacement (mm)
Highest Value	7.444e+008	1.508e-002	8036e+001
Lowest Value	4.136e=007	0.000e-000	1.000e-0.30

Table- IV: Result when stainless steel is used

	Stress (N/m^2)	Strain	Displacement (mm)
Highest Value	7.342e+008	1.535e-002	7.362e+001
Lowest Value	8.872e-001	2.658e-011	1.000e-0.30

B. Experimental / Testing result

The result for testing was collected based on observation during the testing period for the flood barrier design. The ability of Sealing Rubber to stop water from leaking was checked and functionality of locking mechanism of Pull up Bar. The arrow in Figure 41 indicates the water level when the result was taken.

Fig. 11. Observation from side

Fig. 12. Observation from front

Fig. 13. Observation from back

C. *Discussion*

Based on the result of the analysis that was produced it shows that mild steel has the lowest of the highest displacement value compared to aluminium alloy and stainless steel when the force was applied to the structure of the flood barrier. Meanwhile, the testing result shows that the Sealing Rubber that was used in the project can prevent water from flowing through it, meaning that the whole sealing mechanism that was used in the design and project achieved the intended purpose.

V. CONCLUSION & RECOMMENDATIONS

A. *Conclusion*

The primary goal of the project is to design and fabricate a flood barrier that can be used for domestic usage with that will cover the size of the standard doorframe. Subsequently, the designed flood barrier was analysed with different material to find if there is a much more suitable material for the design, including the initial material which is mild steel. Next, the fabrication of the designed flood barrier was done in scale to test on functionality of the locking mechanism and ability of the chosen sealing rubber type in preventing leakage. As conclusion, although the design and selection of the material in this project can be further improved, it water sealing and locking mechanism working as intended.

B. *Recommendations*

For future work, it is recommended to focus more on the ability to withstand a high amount of force as well as the section where Slide Plate and Body Plate in contact to make sure that both plates will not separate even under high force. Next is, the position of the Pull-up Bar can also be improving or even adding a secondary Pull up Bar to make sure that the locking grip not only focus at the middle of the flood barrier

ACKNOWLEDGMENT

I want to take this opportunity to express my sincere gratitude and appreciation to my supervisor Mr Johan Ihsan Bin Mahmood for his invaluable advice, encouragement, constructive criticism and inspiring guidance but the most of all for his help which has been great favour on my behalf.

REFERENCES

1. Ă, A. P. U. Ș. C., Bobancu, Ș., & Ță, A. D. U. (2010). MECHANICAL PROPERTIES OF RUBBER - AN OVERVIEW. 3(52).
2. Çengel, Y. ., & Cimbala, J. (2006). Fluid Mechanics, Fundamentals and Applications. The McGraw-Hill Companies, Inc.
3. Data, P. P., Examiner, P., Alejandro, R., & Laurentano, A. A. (2009). PORTABLE FLOOD BARRIER SECTION AND FLOOD BARRIER. 2(12). https://doi.org/10.1016/S0141
4. Hylton, P., & Otoupal, W. (2005). Mechanical Advantage. American Society for Engineering Education, 10. Retrieved from https://www.google.com/url?sa=t&rct=j&q=&esrc=s&source=web&cd=1&ved=0ahUKEwjAgeWV3dDLAhXKGY4KHeF6AvAQFggcMAA&url=http%3A%2F%2Fwww.asee.org%2Fdocuments%2Fconferences%2Fk12%2FWorkshopDocuments%2FTeachingMathematicswithRealWorldCorrelation.doc&usg=AFQjCNGvCq

AUTHORS PROFILE

Johan Ihsan Mahmood is working as a lecturer with Universiti Kuala Lumpur Malaysian Spanish Institute (UniKL MSI). He completed his BEng Mechanical from Universiti Sains Malaysia (USM) and his MEng Science from University of New South Wales (UNSW). He also has engineering working experience in manufacturing and R&D from the industry. He is currently a Programme Coordinator for the Programme Bachelor of Engineering Technology in Mechanical Design (BETMD) in UniKL MSI. His research interest is in the field of mechanical design, analysis and CAE. Email: johanihsan@unikl.edu.my

Muhammad Farhan Daud is currently pursuing his Bachelor of Engineering Technology in Mechanical Design (BETMD) in Universiti Kuala Lumpur Malaysian Spanish Institute (UniKL MSI). Previously he obtained his Diploma of Engineering Technology in Mechanical Design & Development also from (UniKL MSI). His research interest is in the field of mechanical design and analysis. Email:farhandaud0@gmail.com

Dr Pranesh Krishnan is working as a Post-Doctoral Researcher. He completed his PhD and MS degrees at Universiti Malaysia Perlis, Malaysia. He has published over 25 articles in reputed conferences and high impact factor journals. His research interests include signal processing, machine learning, drowsiness research, and wearable sensors. Email: pranesh@unikl.edu.my.