International Journal of Innovative Technology and Exploring Engineering (IJITEE)
ISSN: 2278-3075 (Online), Volume-9 Issue-2, December 2019

Modeling and Simulation of Hybrid Micro Grid Employing DG, PV, Wind and Fuel cell

Y Hema, T S Kishore, S D Kaushik

Abstract: Abstract: Electricity has a noteworthy position in our everyday life. For the reason that of the electrical supply is not up to the requirement of the power demand, some remote areas are affected. The micro grids are projected to make available power for hill area networks. Still the RES are atmospheric friendly but they generate power simply when they are available. By way of the additional rise of energy options through RES the need of non-renewable also essential for steady flow of power to the isolated networks. The diesel generators tend to be longer lasting too, offering more opportunities to meet power demand in outback locations. In this thesis a hybrid micro grid system consisting of solar, wind, fuel cell and diesel generator is modeled and simulated. The Modeling of PV array based solar power generation was implemented and the proposed model is simulated at temperature and variable irradiance. Standalone wind energy conversion systems offer a feasible solution to generate power at isolated localities where utility grid extension is not feasible. In this thesis the diesel generator comprises of diesel engine and generator is used for emergency power supply. Dynamic characteristics simulation of a proton exchange membranes fuel cell was introduced for its fast response and zero emission. The hybrid microgrid system is modelled and simulated using MATLAB/SIMULINK and the results are summarized.

Keywords: Diesel generator, Fuel cell, Hybrid micro grid, Inverter and solar photovoltaic

I. INTRODUCTION

In Today's life electrical energy has an effective role for the reason that of its flexibility and efficiency. Even if 100% electricity is available in India but some outback areas still requires power to meet their demand. Because of this their face plenty of problems and it affects their quality of life such as agriculture, economics etc. Consecutively avoid those problems micro-grids are introduced for produce power to rural areas. A micro-grid is a distributed energy system which connects both the power grid and local areas. It requires slighter decision makers and has quick response. Renewable energy sources are ecological, no fuel cost, transport cost also less and high act but the negative aspect of these are supply is available only when they are accessible.

Revised Manuscript Received on December 30, 2019.
***** Correspondence Author
T S Kishore, Department of EEE, GMR Institute of Technology, Rajam-532127, India. Email: kishore.ts@gmrit.edu.in
Y Hema*, Department of EEE, GMR Institute of Technology, Rajam-532127, India. Email: hemaforcherry@gmail.com
S D Kaushik, Department of Power Engineering, GMR Institute of Technology, Rajam-532127, India. Email: kishore.ts@gmrit.edu.in

Production of solar energy is typically depends up on irradiations, if it is rainy or cloudy supply is bare minimum and suppose wind speed is less also minimum amount of power is formed like that so, by with simply renewable energy sources stability to continuous flow of power is not possible in all climate conditions.. A hybrid micro-grid generates power from both the renewable and non-renewable energy sources to get together the steady flow of energy. Although conventional energy sources have some demerits such as high fuel cost, more pollution, availability of is difficult but it gives the backup protection in rural areas. Usually a hybrid micro grid comprise of solar, wind, biomass, geothermal, fuel cell, tidal, hydro, DG, etc. Out of all non-conventional energy sources solar, wind, fuel cells are preferable due to its high potential, easily available and fuel cells make zero emission if pure hydrogen is supplied. And from conventional sources DG (diesel generator) is employed for stand- alone system because it give the uninterrupted power supply. The hybrid micro grid is a realistic solution for the stand-alone areas to meet the difficulties due to its reliability. The paper gives the modeling of hybrid micro grid contains the solar PV, wind, diesel generator, fuel cell, bridge rectifier, dc-dc boost converter, three phase inverter, load and dump load. The hybrid micro grid system has been aim to turn out 6000 watts particularly for island areas. This is a small scale network gives the prop up to the rural areas especially for improvement their life's. The system is designed with the help of MATLAB/SIMULINKword) has been included in the final paper. 2. Final paper is prepared as per journal the template. 3. Contents of the paper are fine and satisfactory. Author (s) can make rectification in the final paper but after the final submission to the journal, rectification is not possible.

II. SYSTEM MODELING

The hybrid micro-grid modeled in the company of solar PV, wind, fuel cell and diesel generator. These four sources are individually connected with DC-DC boost converters to elevate the voltage level and these are attached to the dc bus to get the precise dc output without any fluctuations. The DC voltage is converted to AC by using three phase inverter and then AC voltage is fed to the load through the AC bus. The block diagram representation of the designed system is given below.

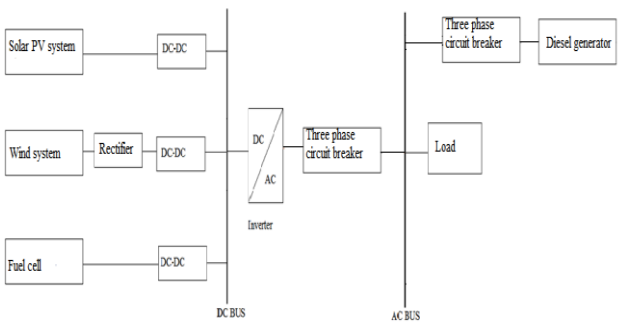

Fig. 1.Block diagram of hybrid micro grid with solar, wind and DG.

A.Solar PV cell:

In solar PV system, electrically energy is produced from the solar energy. Solar energy is depends up on solar radiations. The main components of solar system are photovoltaic array, PV modules, solar cells and battery bank. PV array is core of the system, it is the combination of PV modules and numbers of solar cells are one module. When solar radiations are reached to panels, each solar cell produces a DC voltage. Extra amount power is store in the battery so the solar PV panel load current expressed as

$$I_{PV} = N_p * I_{ph} - N_p * I_{rs}(\exp\left[\frac{Q\,V_o}{TKAN_s}\right] - 1) \quad (1)$$

I_{ph} is photo current is given as

$$I_{Ph} = I_{sc}\,K_I(T - T_r) * \left[\frac{S}{1000}\right] \quad (2)$$

$$I_{RS} = I_{rr} * \left(\frac{T}{T_r}\right)^3 * exp\left\{\frac{Q\,E_g}{KA} * \left[\frac{1}{T_r} - \frac{1}{T}\right]\right\} \quad (3)$$

Where I_{rr} Reverse saturation current,
E_g Energy band gap

The three phase, when connected to power system, the load requirements are nominal voltage of 440V with 50Hz frequency. The requirements of the load, in this case, can be met by either converting the DC to AC supply and then stepping up the voltage using a step-up transformer or by using boost converter. Using a transformer requires special equipment and space for maintenance and operation. A boost converter is used with a gain value of 0.0114 and the voltage (V) increased to 1000V thereby the current (I) value is 1.5A.

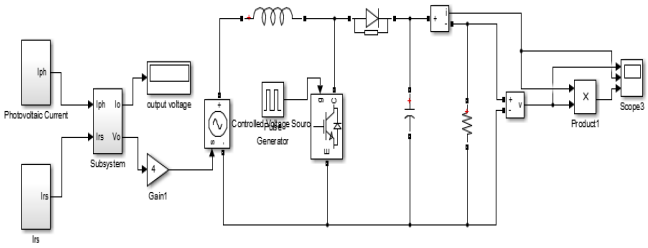

Fig. 2.Simulink model of solar PV panel

B.Modeling wind system

In order to obtain constant voltage magnitude and stabilized frequency, the as varying voltage output from the variable wind turbine permanent magnet synchronous generator is given to a rectifier and a boost converter is used for voltage regulation.

$$P_{wt} = \frac{1}{2}\rho A v^3 C_p(\lambda, \beta) \quad (4)$$

Power transferred to the wind turbine rotor is given by

$$C_p = \frac{P_{wind\ turbine}}{P_{air}} \quad (5)$$

The wind turbine dynamic equation is given by

$$T_m - T_e = Bw_m + J\frac{dw_m}{dt} \quad (6)$$

Electrical torque of the PMSG can be expressed as

$$T_e = \frac{3}{2}P\{\varphi_m i_q + (L_d - L_q)i_d i_q\} \quad (7)$$

Simulink model of wind energy conversion is modeled in MATLAB. The diagram consists of wind turbine, PMSG, bridge rectifier and also one boost converter.

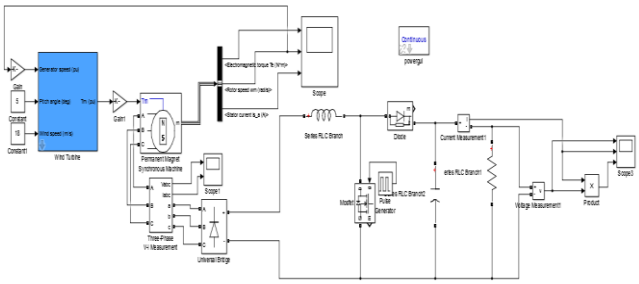

Fig. 3.Simulink model of PMSG based variable speed wind energy conversion system.

The boost converter is (v_i) of 230V. It is boosted with a duty cycle value (D) of 0.76 to which the gain value will be 1.315 so as to obtain the output voltage of 1000V. The designed inductor (L) and capacitor (C) values are for this converter are 0.0217H and 0.000483F respectively. Thereby they obtained output voltage (v) and current (I) from boost converter are v =1000V and I =1.5A.

C.Modeling diesel generator:

Diesel generator is one of the important sources to supplying constant flow of power. With use of these diesel generators fuel cost is reduced and more power is produced as compared to other generators with different fuels like gas. If there is any failure of main sources diesel generator produce power at that time. So, it gives a primary and back up protection to the entire system. Instead of using only renewable energy sources with used the non-renewable energy sources gives a better solution for rural problems.The power produced by the diesel generator can be expressed as follows

$$P_g = P_n * N_g * \eta_g \quad (8)$$

The power generated by the diesel generator is designed to be within the maximum and minimum rated capacity specified by the manufacturers as presented in

$$P_g^{mn} \le P_g(t) \le P_g^{mx} \quad (9)$$

The simulation of a diesel generator system involves diesel engine, excitation system, and synchronous generator is modeled in MATLAB/SIMULINK as shown in Fig.3.12. The diesel generator can be operated with in the permissible range of 500V to 600V for constant fuel input to maintain the stability of the system. DG system is directly connected to isolated load is simulated in MATLAB/SIMULINK environment.

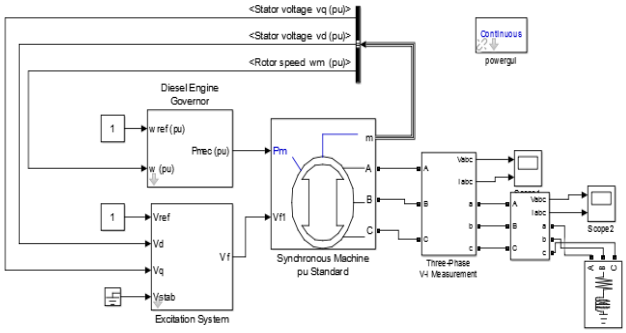

Fig. 4.Simulink model of diesel generator

D.Modeling Fuel cell:

Fuel cell is the one of the important source of producing power for isolated areas. Fuel cell generates power for long time as the fuels of hydrogen and oxygen supplied regularly. It gives primary protection to the system. Compared to all the fuel cells PEM fuel cell ie best one due to its quick response and less emission. It also gives back up protection to the system. As these fuel cells are used in hill areas it will gives implementation to that areas. Fuel cells also play an important for supplying power to the remote areas due its low cost, high efficiency, fast response and mainly less pollution. Mathematical modeling of PEM fuel cell is given as follow

$$V_{fuel\ cell} = E_n - V_a - V_o - V_c \quad (10)$$

The activations voltage of fuel cell is given by

$$V_a = \lambda_1 + \lambda_2 T + \lambda_3 T[\ln(CO_2)] + \lambda_4 T * \ln(I) \quad (11)$$

The ohmic value of voltage of fuel cell is given by

$$V_o = I * (R_{er} * R_{pr}) \quad (12)$$

The concentration voltage drop is given by

$$V_C = -B * \ln\left[1 - \left[\frac{J}{J_{mx}}\right]\right] \quad (13)$$

The fuel cell stack output voltage is given is

$$V_{fuel\ cell} = N * V_{fuel\ cell} \quad (14)$$

The output power of the PEM fuel cell stack is

$$P_s = V_s * I \quad (15)$$

The simulink model of fuel cell is modeled in MATLAB. Fuel cell modeled with fuel cell stack, one boost converter here also two stage of operation is there for fuel cell operation. With using some equations fuel cell is designed and produces DC power in the first stage. And in second stage boost converter is used for getting required level of voltage. The simulation model of PEM fuel cell is given as

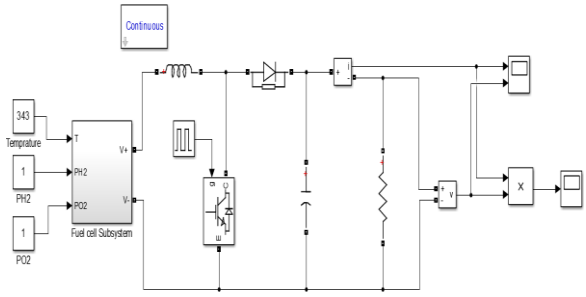

Fig.5.Simulink model of PEM fuel cell stack system

The input voltage to the boost converter is (v_i) of 230V. It is boosted with a duty cycle value (D) of 0.8975 to which the gain value will be 0.0111. so as to obtain the output voltage of 1000V. The designed inductor (L) and capacitor (C) values are for this converter are 0.003084 and 0.0000183F respectively. Thereby they obtained output voltage (v) and current (I) from boost converter are v =1000V and I =1.5A

III. SIMULATION RESULTS AND DISCUSSION

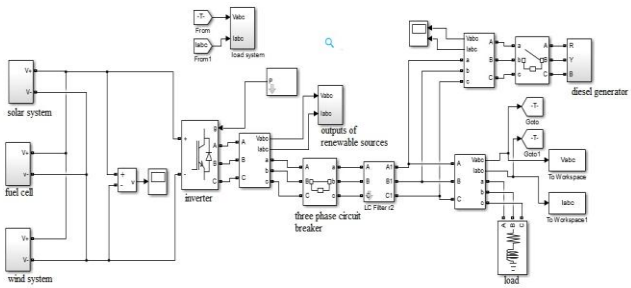

Fig. 6.Simulink model of hybrid micro-grid connected solar PV, wind, fuel cell and diesel

The output voltage, current and power of the boost converter shown in Fig. 4.5 on Y-axis voltage, current and power and on X-axis time in second

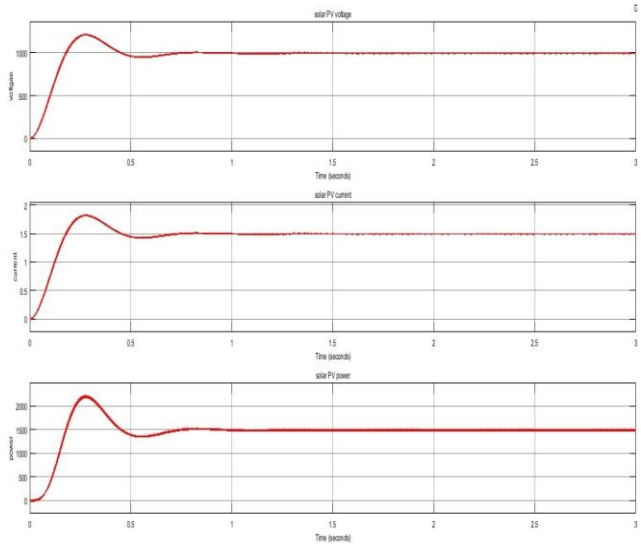

Fig. 7.Boost converter output voltage, current and power of the solar PV

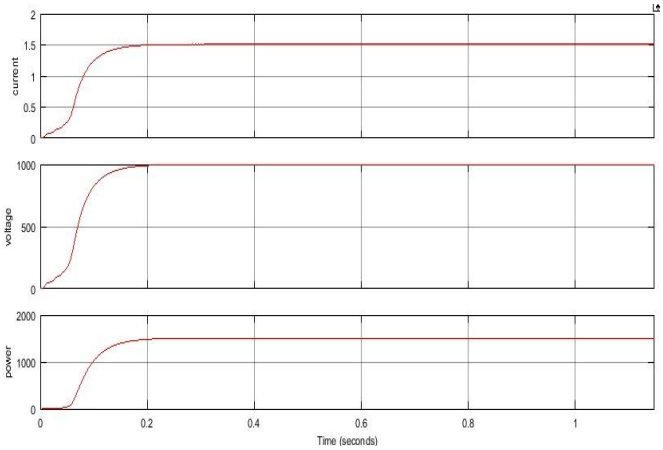

Fig. 8.Boost converter output voltage, current and power Of wind system

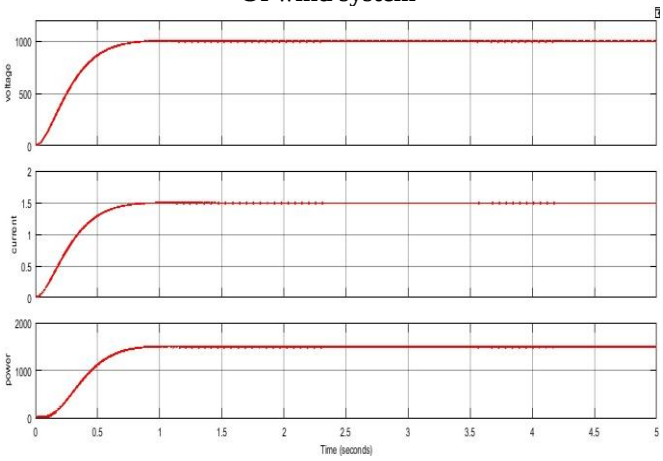

Fig. 9.Boost converter output voltage, current and power of fuel cell.

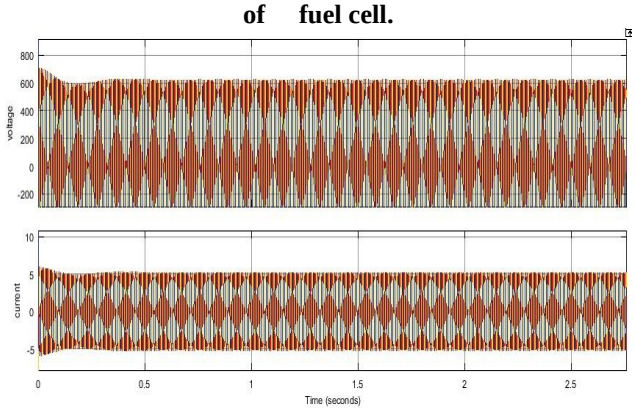

Fig. 10.Output voltage and current of the diesel generator

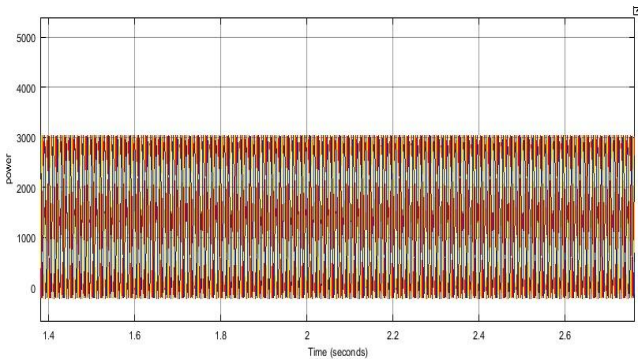

Fig.11.Output power of diesel generator

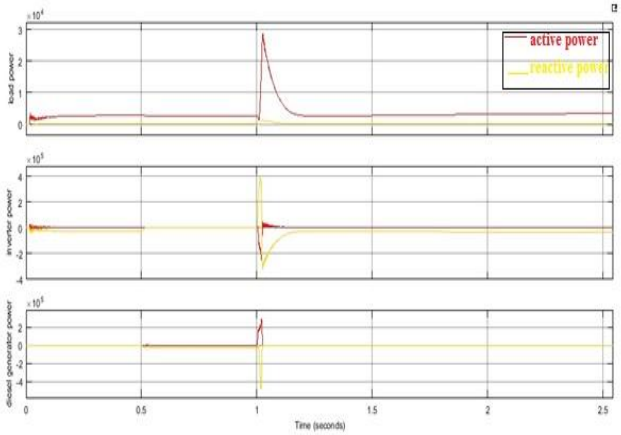

Fig. 12.Output powers of the load, inverter and diesel generator

Output powers of the load, inverter and diesel generator is shown in figure 4.6.3 Renewable energy sources (solar PV, wind, fuel and DG) supplies power through the inverter during normal periods (0 to 0.5 and 1 to 5 seconds) inverter output power is 4500 watts. For the duration of the period of 0.5 to 1 seconds inverter output power is zero. Output power has ripples due to inverter controller is not there in the system. Throughout the period of 0 to 0.5 and 1 to 5 seconds diesel power is zero. Diesel generator supplies power during abnormal periods (0.5 to 1 seconds) diesel output power is 3000 watts. So, power is continuously supplied to the load. The load output power is 3500 watts.

IV. CONCLUSION

In this project, simulation of solar PV, PMSG based variable speed wind energy conversion system and PEM fuel cell stack and diesel generator based hybrid micro-grid system is designed in MATLAB/SIMULINK. Diesel generator can be utilized a standalone, emergency and standby units because of its following characteristics: availability, durability, fast ramp up and reliability etc. Diesel generators have high operating cost and generate electricity on demand when compared with renewable energy sources. Even with the best alternative system such as solar energy or wind energy, sometimes the weather may not cooperate and will land us in darkness when the main power source fails. By using hybrid micro grids for isolated loads the social and economic status of people will be improved.

REFERENCES:

1. Sussanna M M, Kishore T S, Koushik S D, "Design and simulation of standalone integrated renewable energy system for remote areas", International Journal of Research in Engineering and Technology, Volume 5, Issue 8, August 2016, Pages 192-199.
2. Koushik S D, Kishore T S, Sussanna M M, "Design and simulation of standalone closed loop IRES for remote areas", International Journal of Control Theory and Applications, Volume 10, Issue 16, April 2017, Pages 115-123.
3. J. C. Mourmouris, C. Potolias, and J. G. Fantidis, "Evaluation of renewable energy sources exploitation at remote regions, using Computing model and multi-criteria Analysis: A Case-Study in Samothrace, Greece", *Int. J. Renew. ENERGY Res.*, vol. 2, no. 2, 2012, pp. 308–316.

4. M. H. Nehrir, C. Wang, K. Strunz, H. Aki, R. Ramakumar, J. Bing, Z.Miao, and Z. Salameh, " A Review of Hybrid Renewable/Alternative Energy Systems for Electric Power Generation: Configurations, Control, and Applications," *IEEE Trans. on Sustainable Energy*, vol. 2, pp. 392 - 403, Oct. 2011.
5. K. E. Yeager, J. R. Willis, "Modeling of emergency diesel generators in an 800 megawatt nuclear power plant", *Energy Conversion IEEE Transactions on*, vol. 8, no. 3, pp. 433-441, 2014.
6. T S Kishore, S Mahesh Kumar, "Towards Self-reliant Renewable Power Generation: Techno-Economic Analysis of an Educational Institute based Hybrid Power System", Water & Energy International, Volume 61, Issue 7, October 2018, Pages –31-37.
7. C. Nayar, "Remote area micro grid system using diesel driven doubly fed induction generators photovoltaic and wind generators", *Sustainable Energy Technologies ICSET*, 2008.
8. Niya, S.M.R.; Hoorfar, M. Study of proton exchange fuel cells using electrochemical impedance spectroscopy technique A review. J. Power Sources 2013, 240, 281–293.
9. Kishore, T S; Singal, S K, "Analysis of Investment Issues and Transmission Schemes for Grid Integration of Remote Renewable Energy Sources", International Journal of Renewable Energy Research, Volume 10, Issue 2, June 2015, Pages 483-490.
10. D. Ali and D. D. Aklil-D 'Halluin, "Modelling a proton exchange membrane (PEM) fuel cell system as a hybrid power supply for standalone applications," in 2011 Asia-Pacific Power and Energy Engineering Conference (APPEEC '11), pp. 1–5, March 2011
11. Correa, F.A. Farret, V.A. Popov, and M.G. Simoes, "Sensitivity Analysis of the Modeling Parameters Used in Simulation of Proton Exchange Membrane Fuel Cells," IEEE Trans. On Energy Conv., Vol.20, 2005, pp. 211-218

AUTHORS PROFILE

Mrs. Y Hema has completed her B.Tech in Electrical and Electronics Engineering from JNTU Kakinada. Currently she is pursuing her post graduation in Power and Industrial Drives from the same university.

Dr. T S Kishore was born in India. He received his B.Tech degree in Electrical and Electronic Engineering and M.tech in Power System Control and Automation from Jawaharlal Nehru Technological University, Hyderabed, India in 2003 and 2006 respectively. He received his Ph.D. degree in the area of Power Transmission Lines Design and Cost Optimization from Alternate Hydro Energy Centre, IIT Roorkee, Indiain 2015 under QIP program of AICTE. Since 2006, he is serving as Assistant Professor in the Department of Electrical and Electronics Engineering, GMR Institute of Technology, Rajam, Andhra Pradesh, India. He is a member of ISTE, India and IAENG, Hongkong. His main research interests are power transmission, renewable energy, environmental issues and cost analysis.

Mr. S Dattatraya Koushik was born in India. He received his B.Tech degree in Electrical and Electronic Engineering from JNTU Kakinada and M.tech in Power Eletronics from VIT University, India. Presently, he is serving as Assistant Professor in the Department of Power Engineering, GMR Institute of Technology, Rajam, Andhra Pradesh, India.His main research interests are power electronics and renewable energy.