International Journal of Innovative Technology and Exploring Engineering (IJITEE)
ISSN: 2278-3075 (Online), Volume-9 Issue-2, December 2019

Vertical Upgrading of Existing Water Treatment Plants by using Air Flotation Technique

Mostafa, N.S., El-Nadi, M.E.H., Ibrahim, M.S.A.R., Nasar,N.A.H.

***ABSTRACT:** Due to the rate increase for potable water need, the general market trend is the vertical expansions for water treatment plants instead of the horizontal ones. By upgrading the existing plants using new technology to reach the maximum capacity and conserve the water quality parameters as the Egyptian Code states. The most benefits of plant upgrading are no new land is needed also, low cost solution, as we could upgrade the WTP as mentioned before without adding major civil works comparing with the construction of new water treatment. This study aims to upgrade the existing water treatment plants using dissolved air floatation system, in order to reach the maximum possible capacity using several possible scenarios without adding major civil works. The study shows that, the scenario which involves DAF technology then sedimentation and filtration has the best removal efficiency because it has three treatment phases. The use of one treatment phase from floatation or sedimentation followed by filtration achieved lower efficiency. At last direct filtration, considering low removal efficiencies due to the high rate of filtration which allowed the suspended solids to escape.For the application upon Al Ameriyah water treatment plant, the first proposal which involves five combined tanks, two tube settler and one filter tank is the most convenient proposal to be achieved. Since it has quiet high value 72 points in the technical evaluation with the least estimated cost 85,769,200 LE. The use of DAF technology combined with sedimentation gives the chance to increase the existing plant capacity from 520000 m^3/day to 864815 m^3/day with rate of increase equals 66.31% which is a cheap and happy solution.*

***KEY WORDS;** Water Treatment, Air Flotation technique, Upgrading of Existing plants, Vertical Upgrading.*

I. INTRODUCTION

With the population growth and the civilization progress more potable water is required, and new water treatment plants should be constructed.

Revised Manuscript Received on December 30, 2019.
***** Correspondence Author
Mostafa*, Sanitary Eng. Section, Public Works Department, Faculty of Engineering, ASU, Cairo, Egypt.
N.S., Sanitary Eng. Section, Public Works Department, Faculty of Engineering, ASU, Cairo, Egypt.
El-Nadi, Sanitary Eng. Section, Public Works Department, Faculty of Engineering, ASU, Cairo, Egypt.
M.E.H., Sanitary Eng. Section, Public Works Department, Faculty of Engineering, ASU, Cairo, Egypt.
Ibrahim, Sanitary Eng. Section, Public Works Department, Faculty of Engineering, ASU, Cairo, Egypt.
M.S.A.R., Sanitary Eng. Section, Public Works Department, Faculty of Engineering, ASU, Cairo, Egypt.
Nasar, Sanitary Eng. Section, Public Works Department, Faculty of Engineering, ASU, Cairo, Egypt.
N.A.H., Sanitary Eng. Section, Public Works Department, Faculty of Engineering, ASU, Cairo, Egypt.

Unfortunately, there are some obstacles such as: Massive initial cost for construction a new water treatment plants, insufficient space beside surface water sources (agriculture land) and inconvenient space in desert land due to high cost of the construction, operation and maintenance for carrier lines.

As a result, the general market trend is the vertical expansions for water treatment plants instead of the horizontal ones. By upgrading the existing plants using new technology to reach the maximum capacity and conserve the water quality parameters as the Egyptian Code states. The most benefits of plant upgrading are no new land is needed as we could upgrade the WTP as mentioned before without adding major civil works. So, it is better than building a new WTP and consuming new land. Low cost solution as it could be done without adding major civil works comparing with the construction of new water treatment. The new technology that could be applying air flotation system instead of sedimentation or with it with involving the different types of newly sedimentation techniques such as: accelerator, precipitator, pulsator, plate and tube settler.

The study aimed to Upgrade the existing water treatment plant in order to reach the maximum possible capacity using several possible solutions including changing the technology/or mechanical works without adding major civil works.

II. LITRATURE REVIEW

In view of the fact to upgrade the WTP, adjustments should be applied by many of procedures. Such procedures are:

1. Using existing units with maximum productivity.
2. Increasing pumping and piping capacities.
3. Building of new units.
4. Modifying the existing units through changing the mechanical design or the function of the units or both.

The study chooses the fourth item of modifying the existing units through changing the mechanical design or the function of the units or both to be applied in it. Usually this method is used when there is no availability for additional land to improve thecharacteristics of conventional settling tanks systems.

Many modifications had applied on the conventional Clariflocculator, in order to use smaller footprint and increase the capacity of the unit itself. Such modifications units are Accelator, Precipitator, Pulsator, Plate/Tube Settler and Super Pulsator.

The Accelator made to minimize running cost and land needs. The Accelator employs dynamic separation of sludge from clarified water allowing increased loading rates versus conventional settling tanks.

This system has retention time 1.5 to 2 hours **[1]** and surface loading rate from 55 to 180 m^3/m^2/day **[2]**.In1980, Markaz El Luxor water treatment plant has upgraded using the Accelator. As the Accelator Clarifier has chosen to increase the capacity and overcome the land availability problem **[3]**.

The precipitator developed to be used instead of clariflocculator. The efficiency of the unit depends on the recirculation rate of water and solids **[1].** This system has retention time 45 to 75 minutes and surface loading rate 30 to 90 m^3/m^2/day **[4]**.

The pulsator clarifiers developed to achieve a higher surface loading rate from 60 to 120 m^3/m^2/day **[4]**. The unique design integrates a sludge blanket created from a vacuum generated flow pulsation that results in excellent effluent quality at minimal operating costs.

In Richmond, VA water treatment plant, inclined plate settlers have been selected to increase the capacity from 63600 m3/day to 58400 m3/day. To handle the demand, conventional basins without plate settlers would have been so large, required much greater land area, and cost millions more to build. So,each of the four conventional settling tanks is being retrofitted with 3,150 Inclined Plate Settlers. Installation is phased with the completion of one basin per year over a four-year period. The first basin was completed in 2015 with installation of the final three basins to be completed by 2018 **[5]**.

The super pulsator combines pulsator with lamella principle in one basin. It introduced a widely spaced inclined plates to enhance settling which results in an increase in the loading rate up to 288 m3/m2/day and retention time 15 to 25 minutes **[5]**.The Cary/Apex Water Treatment Plant has been upgraded to increase the plant's original daily treatment capacity from 60000m^3/day to the current 150,000m^3/day using super-pulsator clarifier in a footprint significantly smaller than conventional sedimentation basins of comparable capacity **[6]**.

Floatation processes based on the idea of low specific gravity solids separation from the body of the liquid which has higher specific gravity to the surface by means of bubble attachment. Solids which have specific gravity slightly greater than the body of the liquid are artificially lowered by the attachment of gas bubbles.So, the bubble sizeis the important role in the floatation process.

The flotation clarifiers used when an algae problem is existing, or the particles are too small to settle. The flotation clarifier introduces air bubbles to the flocculated water and cause the floc particles to float to the surface. There are three types of floatation process such as Electro- floatation, Dispersed air floatation and Dissolved air floatation. Dissolved air floatation is mostly using in the water treatment plants as it allows retention time of 20 to 40 minutes and loading rates from 480 to 960 m3/m2/day up to 10 times that of conventional clarifiers **[7]**.

Filtration is the process of passing water through material to remove particulate and other impurities, including floc, from the water being treated. These impurities consist of suspended particles (fine silts and clays), biological matter (bacteria, plankton, spores, cysts or other matter) and floc. The material used in filters for public water purification has developed through centuries. The history of used materials clarified here after.

Sand used as a main filter media since 1627 **[8]**, several types of sand filters had been applied for water treatment to remove all impurities and most of microorganisms. These types could be classified by filtration rate as slow sand filters, rapid sand filters and super rate filters.

In urban areas the slow sand filter occupies too much valuablearea. Typical filtration rate for rapid sand filter is 100 m3/m2/day to 200 m3/m2/day or 40 times the filtration speed of a slow sand filter. The rapid sand filter meets the need for a higher filtration rate but giving up filtration power, so it is almost always necessary to use a chemical coagulant before a rapid sand filter **[9]**.The super rate sand filter is applied after the high efficiency chemical precipitation unit or for light solid loads. It is use high rate of filtration from 150 to 250 m3/m2/day under gravity conditions **[10]**.A pressure filter is similar to a gravity sand filter except that the filter is completely enclosed in a pressure vessel such as a steel tank and is operated under pressure. Pressure filters have been found to offer lower installation and operation costs in small filtration plants. However, they are generally somewhat less reliable than gravity filters. Maximum filtration rates for pressure filters ranges from 120 m3/m2/day to 250 m3/m2/day **[11]**.

Coal filter is a relatively cheap and efficient way to purify water as it has large surface area. This allows coal to physically absorb a large amount of chemicals and substances that pose serious dangers to the normal domestic water supply. Several applications for anthracite coal filter in industrial water treatment were made during the last 70 years. This was applied by using this media instead of sand to use its small particle size to meet the very small impurities needs and improve the microorganism removal. Mainly it was applied for food industry **[10]**.

Cock coal filter first application was in industrial water treatment were made during the last 40 years. This was applied by using this media instead of anthracite to improve the microorganisms & small impurities removal for several industries specially food and pharmaceutical industries **[10]**.Also, the use of activated carbon (granular form) as a filter media achieved high adsorptive capacity of remove taste and odor-causing compounds, as well as other trace organics from the water. However, not all organic compounds are removed with the same degree of efficiency. Activated carbon can be added to existing filters or can be incorporated as a separate process. Provision should be made for regeneration or reactivation of "spent" carbon (carbon which has lost its adsorptive capacity) either on or off-site **[11]**.

The idea of combining fine sand reinforced with anthracite coal called Dual media filter. These filters consist of a coating of anthracite (1.25-2.5mm) resting on a coating of fine sand (1-1.5mm). Dual media filters are used in places where the raw water contains suspended contaminants, turbidity and iron. Dual media filters provide very efficient particle removal under the conditions of high filtering rate of 290 m3/m2/day**[11]**.Multimedia filters typically have approximately a layer of anthracite coal overlaying a layer of silica sand and an additional layer of garnet.

This combination of media permits a higher filtration rate range from 408 m3/m2/day to 580 m3/m2/day **[9]**.

Many units could be combined in order to upgrade a conventional system. The floatation clarifiers could be combined with flocculation unit or sedimentation unit or filtration unit, (as following) this depending upon the required quality and capacity. Floatation could be combined with Sedimentation in one basin by introducing a bubble air system into the sedimentation tank and cause the floc particles to float to the surface. In 1976, El Postan Water Treatment Plant used this technique to get rid of the algae problem **[12]**.This was made by introducing air to one of the existing rectangular settling tankswith keeping the other three tanks as only sedimentation. This trial succeeded to minimize the algae problem and improve the removal of suspended solids in the settling tank by 20% **[13]**.

Filter unit could be modified to adapt floatation principle in order to increase the capacity as Dr. Faten Abd El Ghafar recommended in her Msc thesis in civil engineering **[13]**.Dr. Riham Abdel Salam applied a Flo-Filter unit that consist of floatation tank followed by filtration unit compacted in one basin. The pilot plant for this unit is constructed in El Ameriyah water treatment plant. She recommended in her Msc thesis that Flo-Filter should be applied as a good method for the cases of high algae loads and in suspended solid removal. Also applied in the old plants by modifying the existing rapid sand filter units to solve that problem**[14]**.

III. MATERIALS & METHODS

The study experimental work is divided into two phases: First the lab scale phase, then the field application phase. Our pilot plant situated in the sanitary engineering laboratory at faculty of engineering, Ain Shams University.

Then an application on a chosen water treatment plant was made using the optimal technique from the lab scale study. This application was made to determine the maximum possible production increase taking into consideration not to build new units. The chosen plant is Al Ameriyah WTP.

The proposed pilot consists of a set of tanks, each tank has a specific function to clarify the water source. They aresource tank, flash mixing unit, flocculation unit, DAF unit, sedimentation unit and filter unit. The flow line diagram for the treatment units are illustrated in figure (1) and the erected pilot is shown in figure (2).

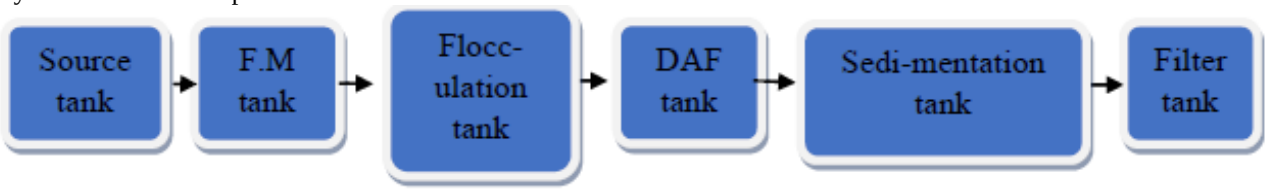

Figure (1) Flow line diagram for chemical treatment

1-Source tank, 2-Alum solution unit, 3-Flash mixer, 4-Flash mixing unit, 5-Flocculator mixer, 6-Flocculation unit, 7-DAF unit, 8-Sedimentation unit, 9-Filter unit

Figure (2) Pilot plant

The source tank size is 200 liter and we used mechanical mixer to prevent the solids settlement. The alum solution unit size is 0.25 liter.

The flash mixing unit size is 1 liter and the coagulated water is rapidly mixed by a tilting mixer with a speed of 150 to 200 rpm. The size of flocculation unit is 2 liters and the coagulated water is gently mixed by a tilting mixer with a speed of 1 to 5 rpm.The size of DAF unit is 1 liter and a pressurizing air pump is installed to recycle the water with air bubbles with rate equal 1.75 ml/min. The sedimentationunit is2 liters. All the tanks are made from plastic. The sludge was removed manually.The filter unit is made from 6-inch UPVC pipe and50 cm in length and the media used is sand and a layer of gravel to carry it.

IV. OPERATION PROGRAM

The pilot arrangement as shown in figure (3) explains the chemical system process. In the chemical treatment, the water flows through the inlet pipe to F.M.T then the flocculation tank. A rapid mixing then a gentle mixing applied respectively in the previous tanks to form the flocs. Then the water enters the DAF tank to float the flocs up to the surface. The clarified water is collected from the bottom of the DAF tank and enters the sedimentation tank to settle the particles which, escape from the DAF tank. After that the water enters the filter to remove the fine particles.

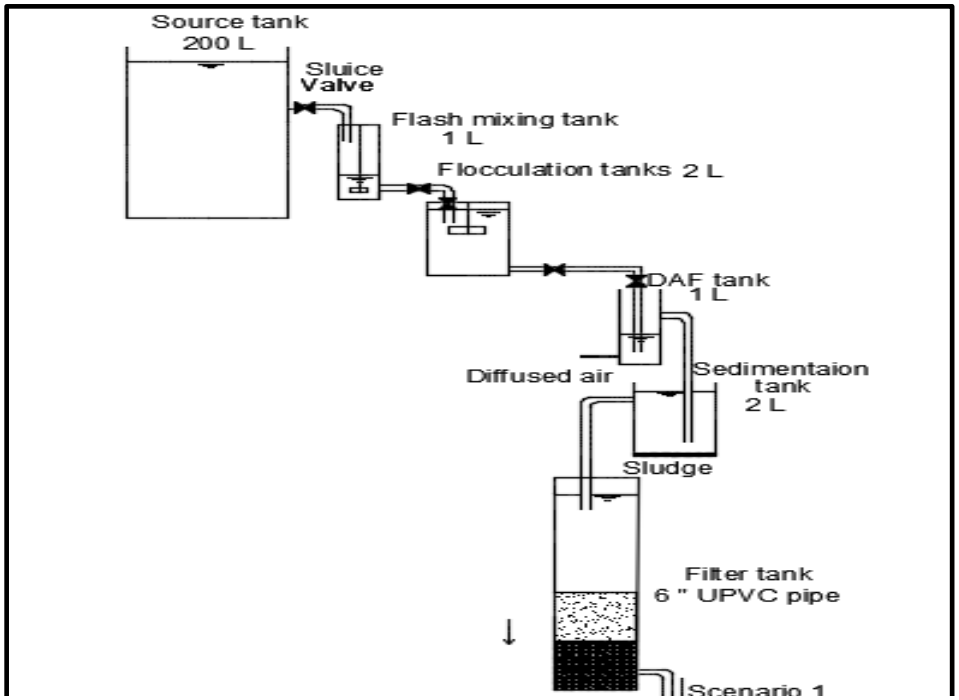

Figure (3) Pilot arrangement using chemicals

The operation program procedure for the study was as follows:

1. Operating the pilot plant with variable rate of filtration from 200 m^3/m^2/day to 100 m^3/m^2/day.
2. Operating of pilot plant with variable rates of filtration based on fixing effluent efficiency.
3. Taking in consideration the avg, max and min design parameters for DAF unit, sedimentation unit and filter, this mean we have three runs.
4. The run duration is three days for each run.
5. The samples are taken for threedays during the three runs, in each day at the end of the working period. Every day in the three days represent the maximum, minimum and average run as well as the working period differs according to each run.
6. The following parameters are measured during the study, Total suspended solids (TSS), Temperature and PH

The results from this phase give the chance to propose a modification on the existing plant to produce the maximum possible production capacity with the application of DAF technology and without any new constructed units or additional land need.

V. RESULTS & DISCUSSIONS

The results of laboratory work illustrated and discussed hereafter to determine the maximum possible treatment application to increase the plant production capacity without need for new land or civil units by applying the DAF system.

The results of the pilot plant operation during the study period from April 2019 till May 2019 to measure the factors and calculate the removal efficiency for the system.

Table (1) Results For First Run

DAYS		1	2	3
Raw	TSS (ppm)	64.00		
	PH	8.00		
F1	TSS (ppm)	0.04	0.02	0.03
	PH	7	7	7
D1	TSS (ppm)	12.70	10.80	11.80
	PH	5.6	5.7	5.7
S1	TSS (ppm)	1.00	0.70	0.90
	PH	7	7	7
Temp.°C		26	25	25

Table (2) Results For Second Run

DAYS		1	2	3
Raw	TSS (ppm)	80.00		
	PH	8.00		
F1	TSS (ppm)	0.08	0.09	0.07
	PH	7	7	7
D1	TSS (ppm)	16.70	17.20	16.00
	PH	5.5	5.4	5.5
S1	TSS (ppm)	1.60	1.70	1.50
	PH	7	7	7
Temp.°C		26	23	23

Table (3) Results For Third Run

DAYS		1	2	3
Raw	TSS (ppm)	77.00		
	PH	8.00		
F1	TSS (ppm)	0.01	0.03	0.01
	PH	7	7	7
D1	TSS (ppm)	12.80	13.60	12.80
	PH	5.6	5.6	5.6
S1	TSS (ppm)	0.50	0.70	0.60
	PH	7	7	7
Temp.°C		22	25	27

From the results, the TSS removal effiicencyfor the system could be illustrated in figure (4) for the different design criteria.

The TSS removal efficiency for all the three runs achieved the approximately zero TSS as the Egyptian code states (100%). The third run with minimum design criteria achieved the best results as the high retention time for the DAF unit and sedimentation unit allowed much suspended solids to settle down also, the low rate of filtration for the filter.

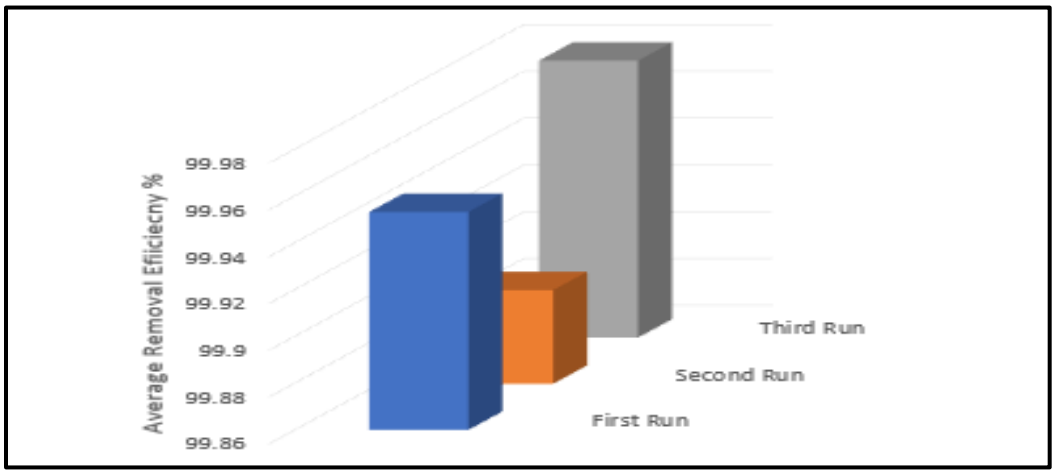

Figure (4) Various TSS Removal Efficiency For Design Criteria Parameters

Since all the previous runs achieved high TSS removal efficiency, the DAF technology could be used with the maximum permissible criteria limitsfor all units to increase the capacity of chosen WTP instead of the traditional ways of treatment.

VI. APPLICATION ON EXISTING PLANT

The application upon Al Ameriyah WTP proposal was aiming to adjust the eight original clariflocculator that shown in figure (5) to adapt the increasing in the capacity reaching for the maximum possible capacity by changing the design criteria and modifying the existing units to add the DAF units as illustrated hereafter.

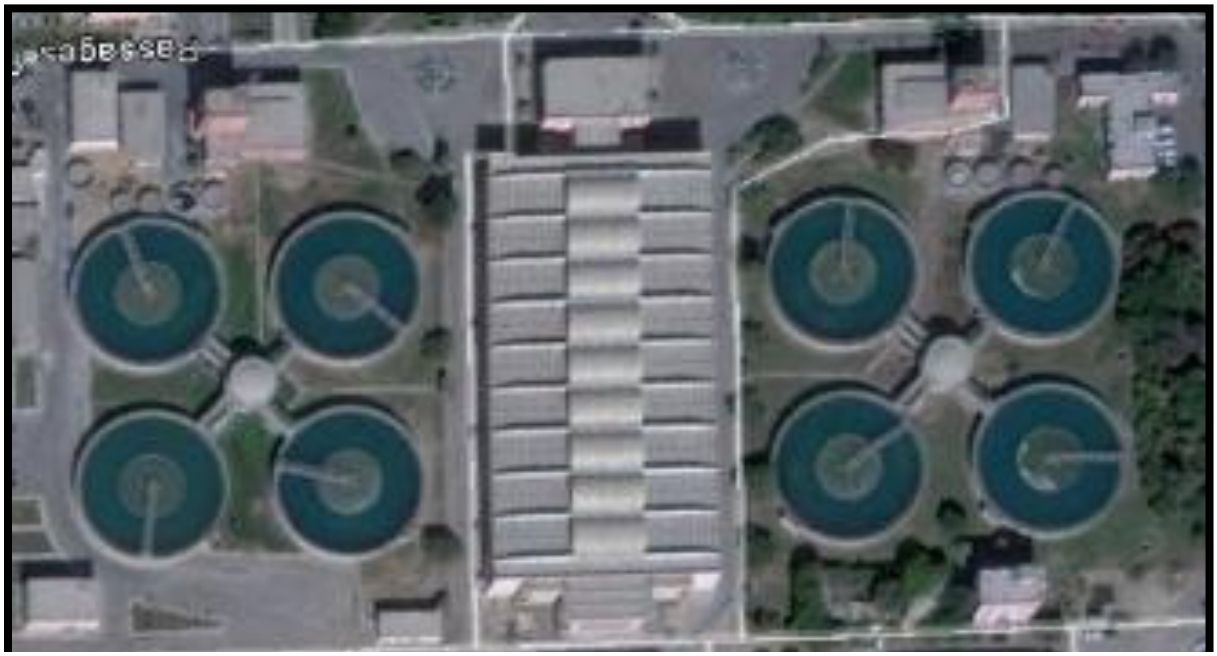

Figure (5) Plan for the eight clariflocculator in Al Ameriyah WTP

The study proposalshown in figure (6) includes modifying of five from the existing clariflocculators to be DAF unit combined with flocculation unit (figure (7)). By taking the minimum retention time for the flocculation zone and get the maximum discharge for the combined tank and then get the corresponding retention time for DAF unit taking into consideration the maximum rate of filtration for the existing rapid sand filter and a chance of using one of the conventional tanks as a filter (figure (8)) and modified two Clariflocculators to be two tube settler units as illustrated in figure (9)...

Figure (6) Layout For Existing Plant Modification Proposal

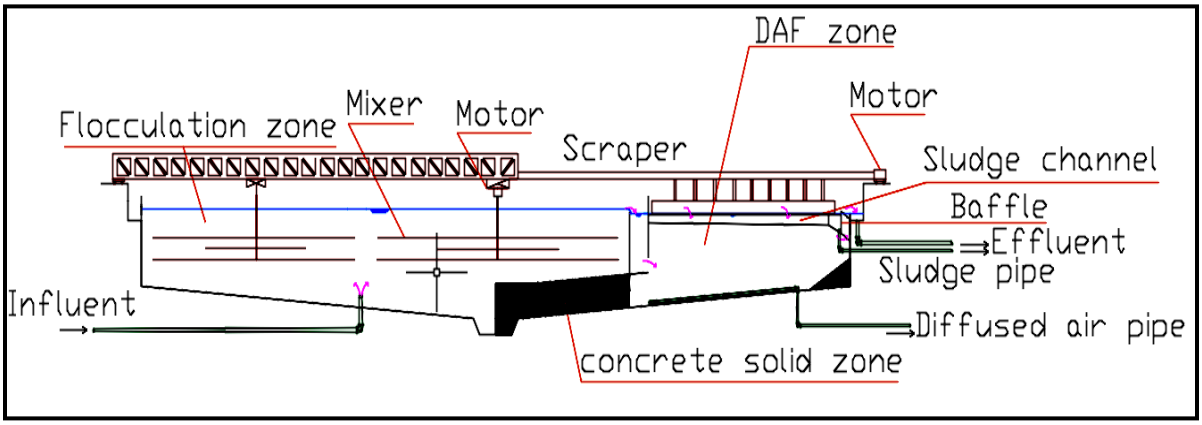

Figure (7) Section in the modified combined tank

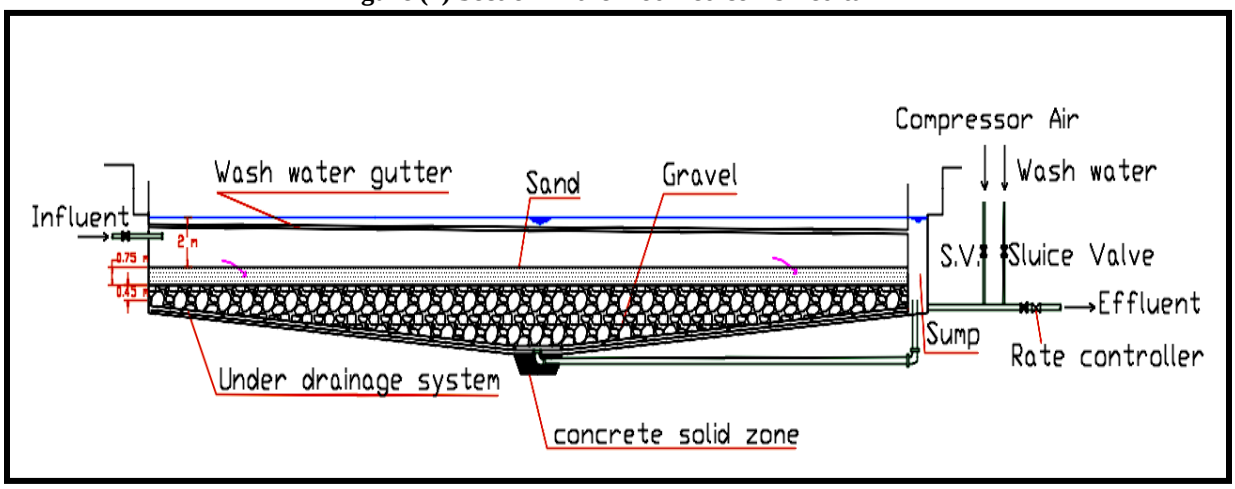

Figure (8) Section in the modified tank to be filter

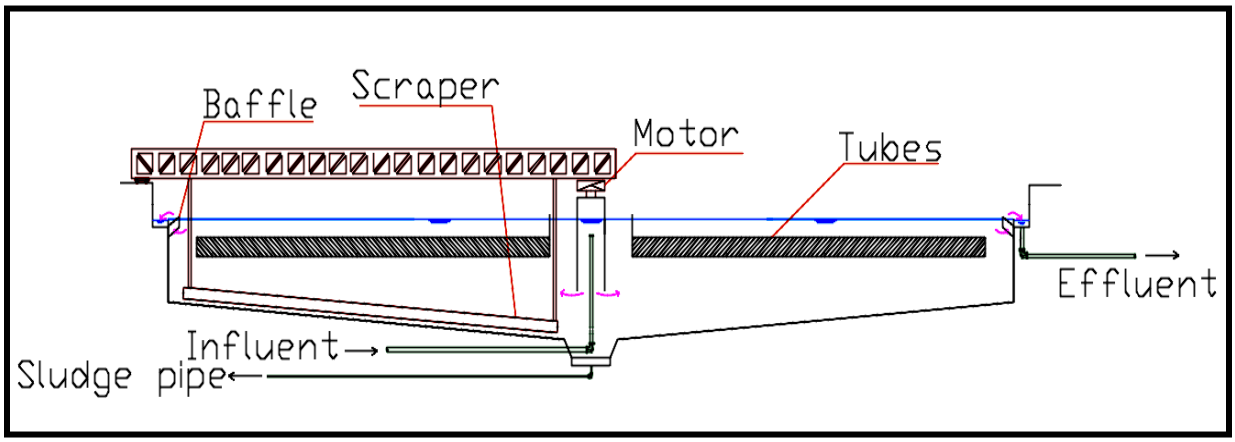

Figure (9) Section in the modified tank to tube settler

For the study proposal,the two existing flash mixing tanks will be able to cover the incoming discharge increase. Five combined units are used to achieve the increased capacity. The combined unit consists of flocculation zone and DAF zone. Then the water flows to two sedimentation units which are tube settler. Also using one of the conventional tanks as a filter after taking the maximum rate of filtration for all the existing rapid sand filter.

According to the calculations the maximum capacity production for this proposal is 864815.40 m3/day. Noting that the capacity for the conventional WTP is 520000 m^3/day. So, the increase equals 66.31% from the existing capacity. Due to the increase in the incoming discharge and the adjustment in the units, the piping and pumping facilities arealso changed. The calculation table for this proposal is illustrated as shown in table (4).

Table (4) Calculation For Existing Plant Modification Proposal

Scenario 1 ((Flocculation => DAF))Combined tank => Sedimentation =>Filter										
Design criteria	**RT (mint)**	**RT (hr)**	**Ø (m)**	**Depth(m)**	**Volume(m3)**	**Qmm/ tank (m3/hr)**	**Qmm/ tank (m3/day)**	**No. of units**	**Qmm (m3/day)**	**The increase**
Flash mixing unit	0.70	0.01	8	5	251	21620.39	518889.2	1	864815.4	66.31
	1.05	0.02	8	5	251	14413.59	345926.2	1		
Flocculation zone	20	0.33	18	4.50	2402	7206.80	172963.1	5		
DAF zone	38	0.63	42	5	4521	7206.8	172963.1			
Sedimentation unit	23.10	0.385	42	5	6924	17983.64	431607.3	2		
Filter unit	**Existing units**				**clarifiers used as filters**			1		
	Area per filter (m2)	**Rate of filtration (m3/m2/day)**	**NO. of filters**	**Q total (m3/day)**	**Area per tank (m2)**	**Rate of filtration in clarifier (m3/m2/day)**	**Qmm/ Clarifier (m3/day)**			
	110.25	200	32	705600	1385	115	159215			

Here are the changes and its predicted cost according to January 2019 taking into consideration a 10% inflation rate.
For the collection works, two treated steel intake conduits will be located with diameter 1100 mm and total length 190 m beside the four original conduits with estimated cost 1,400,000 LE.
The required raw lift pumps specifications are six pumps with flow rate 6480 m^3/hr at 12 m head & rated power 1920 Hp, and six pumps with flow rate 3600 m^3/hr at 12 m & rated power 800 Hp with estimated cost 9,000,000LE.
For the transmission lines, two treated steel pipes will be located beside the original pipes with diameter 1200 mm and total length 100 m connecting to two pipes with diameter 1000 mm with total length 300 m will cost 2,636,773 LE.Here for the collection works the total estimated cost is 13,036,773LE.
The treatment works consists of a series of tanks and pipes connecting between them. This is illustrated as following:
First the Combined Tank, for demolishing and breaking reinforcement concrete walls of 310 m3 from the conventional flocculation zone unit for enlargement purpose, the estimated cost is 124,000 LE.
For supplying and pouring the plain concrete for flocculation solid zone of 97 m3, the estimated cost is 87,300 LE.
For supplying and pouring the plain concrete for DAF solid zone of 110 m3, the estimated cost is 99,000 LE.
For Supplying fiber sheets of 18 m2 for scum channel as per designed for the DAF zone the estimated cost is 10,000 LE.
10 m diameter mixer with 5 rpm and rated power 3 KW will be introduced in the flocculation extension part with estimated cost 165,000 LE.
For the DAF zone, two motors 37 Kw, two rubber summers and a guide rails on the outer perimeter will be used with estimated cost 80,000 LE.
A 12 m3 stainless treated steel saturation vessel is used to receive the 5% recycle stream with estimated cost 16,500 LE.
The required air compressor flow rate is 1390 L/min, with estimated cost 9000 LE.
The required recirculation pumps specifications for DAF unit are two pumps with flow rate 360 m3/hr at 51 m head & rated power 230 Hp, its estimated cost is 300,000 LE.
For the dissolved air pipes, one PVC pipe with 300 mm diameter and three pipes with diameter 200 mm is needed with total length 200 m, the estimated cost is 16,000 LE.
The estimated cost for air injection nozzles (2 orifice plates and shroud section) is 20,000LE, as the total number per tank is 22600 nozzles.
For the scum pipes, the old sludge pipes will be used.
The estimated cost for one combined tank is 926,800 LE, so the five tanks estimated cost is 4,634,000LE
For the alum solution tanks, the existing tanks would be enough, as the storage time would be 1.5 day instead of 3 days. Also, two additional dosing pumps are needed with flow rate 1630 L/hr at 20 m head. The estimated cost for the dosing pumps is 15000 LE.
For the effluent pipes from combined tank to the tube settler tank, there are five treated steel pipes with 225 m total length and 1200 mm diameter. These five pipes are connecting to two 1500 mm diameter pipes with total length 150 m. One 2200 mm pipe with total length 290 is connected to the previous pipes, finally two pipes with diameter 1800 mm with 85 m in length. The estimated cost for the previous pipes is 10,500,000 LE.
Secondthe Tube settler tank, the demolishing and breaking reinforcement concrete walls of 606 m^3 from the conventional flocculation zone unit, the estimated cost is 241,600 LE.
For Supplying 40 m^2 of fiber sheets for circular baffle around the influent pipe, the estimated cost is 20,000 LE
For supplying new chains for the old sludge removal system is 1000 LE.
For the tube settler modules which made of polypropylene we need 322994 tube to cover the total area of the tank. The tube inclined angle is 55°, having a 51 mm circular cross section with 610mm in length. Its estimated cost is 9,689,820 LE.
IPE 160 is used as a supporting system with estimated cost 104,400 LE.
One PVC sludge pipes with diameter 500 mm and total length 30 m is needed with estimated cost 5,800 LE.
For the sludge tank, the old one will receive the extra new sludge but with remaining time inside it equal 1.5 hr instead of 2 hrs.
The estimated cost for one tube settler tank is 10,062,620 LE, so the cost for two tanks is 20,125,240 LE.
For the effluent pipes from tube settler tank to the filter tank, there are two treated steel pipes with 120 m total length and 2500 mm diameter. These two pipes are connecting to one 3500 mm diameter pipes with total length 18 m, the estimated cost for these pipes is 3,150,000LE.
For the effluent sludge pipes one PVC pipes is needed to connect the with diameter 800mm with estimated cost 432,500 LE.
Thirdthe Filter Tank, the demolishing and breaking reinforcement concrete walls of 606 m^3 from the conventional flocculation zone unit, the estimated cost is 242400 LE.
For supplying and pouring the plain concrete solid zones of 27m^3, the estimated cost is 24,300 LE.
For Supplying 26 m3 building bricks for sump wall, the estimated cost is 5,250 LE.
Supply and install 10009 m^3 of sand with mean diameter range 0.6 to 1.5 mm andcoefficient of regularity ranges 1.35 to 1.50 for the filter media with total cost equals 1,501,350 LE.
Supply and install 1060 m^3 of gravel media with mean diameter ranges from 3 mm to 60 mm, for the filter media with total cost equals 53,000 LE.
For the under-drainage system, we need perforated PVC pipes with diameter ranges from 100 mm to 1000 mm with total estimated cost 66,000 LE.
The eight air compressors with air flow rate 84000 L/min at 0.6 m and the eight treated steel 400 mm pipes will cost 3,337,528 LE.
For the back wash pumps we need two pumps with flow rate 250 M^3/hr at 15 m head and rated power 33 HP. The estimated cost for the back-wash pumps is 180,000 LE.
Four wash water gutters from fiber sheets with total surface area 225 m^2, with estimated cost equal112,500 LE.
For the pre and post chlorination, the storage time for the existing cylinders is enough for 2 weeks instead of 3.5 weeks.

The total estimated cost for the filter tank is 5,522,328 LE.
One treated steel pipe with diameter 1600 mm is needed for the effluent of the new filter unit, this pipe is connecting to two treated steel pipes with diameter 1200 mm right up the ground reservoir. Also, the old pipes will be replaced as the velocity was higher than the permissible limits. So, two treated steel pipes with diameter 1500 mm is required instead of the two 1200 mm pipes. The estimated cost for the previous pipes is 2,687,963 LE.
Fourth the high Lift Pump, the required high lift pumps specifications are eight pumps with flow rate 6120 m^3/hr at 60 m head & rated power 13600 Hp with estimated cost 24,000,000 LE.
The effluent pipes from ground reservoirs are two treated steel pipes with 1500 mm diameter and another two 1200 mm treated steel pipes with estimated cost 515,381 LE.
The total estimated cost for the first proposal is 126,619,185 LE.

VII. CONCLUSIONS

The study had shown the following specific conclusions: -

1. The lab scale scenario which involves DAF technology then sedimentation and filtration has the best removal efficiency because it has three treatment phases.
2. The pH value of water changes through the study, the high values indicate a lot of TSS and the low values indicate a high chemical concentration.
3. The change in temperature was limited and did not affect the removal ratio of TSS.
4. The study modifying proposal for existing WTP which involves five combined tanks (of flocculation and DAF technology), two tube settler and one filter is achieving total production capacity equals 864815 m^3/day and total estimated cost 85,769,200 LE.
5. The use of DAF gives the chance to increase the existing plant capacity from 520000 m^3/day to 864815 m^3/day withpercent increase equals 66.31%which is a cheap and happy solution.
6. The cost of new treatment plant of 340,000m3/day is about 300,000,000 L.E. this means that the study proposal saves 254,231,000 L.E. that enough to modifyanother three plants with the same capacity.
7. This procedure of solutions for vertical upgrading instead of horizontal upgrading saves money, time and develop the technology that increase the virtual age of the plant units.

REFERENCES

1. Farag, M.A., "**Sanitary Engineering Water Purification Works**", Dar El Ktab El Hadees, Publisher, Vol.2, Chapter 7, P 39-44, Cairo, Egypt, (**2004**).
2. Inflico Company, "**Inflico Accelator Clarifier**",InfilcoDegremont Inc., Degremont Technologies, Richmond, USA (**2013**).
3. EEAA Publications, "**Study About Upper Egypt Water Treatment Plants**", EEAA, Cairo, Egypt (**1996**).
4. EvrenTugtas, A.," **Environmental Engineering Unit Operations",** Marmara University, Istanbul, Turkey. (**2014).**
5. MRI, Meuer Research, "**Plate Settler Installations for Richmond, VA Water Treatment Plant**", MRI advanced water and waste water treatment systems, Richmond, VA, U.S. **(2016)**
6. Water technology, "**Cary/Apex, United States of America**" U.S, (August **2002**), available at: **http://www.water-technology.net/projects/cary/**
7. Edzwald, J.K., "**Developments of High Rate Dissolved Air Flotation for Drinking Water Treatment**", Department of Civil and Environmental Engineering, University of Massachusetts Amherst, USA, (**2007**).
8. Graham, N.J.D.," **Slow Sand Filtration: Recent Developments in Water Treatment Technology**", Ellis Horwood limited, New York, U.S. (**1998**).
9. Engelhardt, T., "**Granular Media Filtration for Water Treatment Applications**", Sales Development Manager – Drinking Water Hach Company.
10. El Nadi, M.H.,"**Water& Wastewater Treatment Works**" Under Graduate Teaching Book, Ain Shams University, Cairo, Egypt, (**2001**).
11. Anderson, J., Beirne, M. and Casey, T., "**WATER TREATMENT MANUALS FILTRATION**", Environmental Protection Agency, Ireland, (1995)
12. SIAG Sweden Consultant, "**Final Report of Algae Removal From W.T.Ps Inlets Project**", Sweden Project Fund, Greater Cairo Water Authority, Cairo, Egypt (**1976**)
13. El Sengary F.A.G, "**Studies On Modifications of Treatment Process to Meet the Change of Nile Water Quality After the Construction of High Dam**", M. Sc. Thesis, Public Works Department, Faculty of Engineering, Ain shams University, Cairo, Egypt (**1986**).
14. Ahmed, R.A.S, "**Development of Water Treatment Plants by Flo-Filter**", M. Sc. Thesis, Public Works Department, Faculty of Engineering, Ain shams University, Cairo, Egypt (**2005**).