International Journal of Innovative Technology and Exploring Engineering (IJITEE)
ISSN: 2278-3075 (Online), Volume-9 Issue-2, December 2019

Development of Control System for Dual NC Machine with Single 6-Axis Robot

Mohd Aliff, Abdul Halim Hamdi, Ismail Yusof, Nor Samsiah

Abstract: ***NC machine now widely used in industry especially in cutting process. It is precision cutting machine but however the effectiveness of this machine is less effective because it used manual handling to operate. For manual handling, it has many factors that affect the performance of the NC machine. This paper is about to developed of control system for dual NC machine with single 6-axis robot and it is important for further analysis regarding the performance of the machine. 6-axis robot commonly used because it can perform wider of flexibility. To design this system, it consists of integration of multiple controllers and image processing and algorithm for vision is required to differentiate before and after products. A design of automation system must be effective for a better result. This system is served for two NC machine with single 6 axis robot. From the result obtained from this research it showed that by having this system can increase the NC machine rate from 60% to 75% and by developed an automation system shall increase the machine rate into maximum ability of the machine.***

Index Terms**:** ***NC machine, Automation, Vision system, Robotic, PLC controller***

I. INTRODUCTION

To develop automation control system for manufacturing industry it must consist elements of logical control, sequence control, important technology control function and to know the status of each equipment. The key factor of process automation is to setup all the calculation necessary and have all the information needed. Basic construction of automation can be made as several level such as to design basic automation system, process automation system and HMI system, by completed that level of construction, the automation shall perform accordingly [1].

As the change of time, the industry now is moving towards into industry 4.0.

Revised Manuscript Received on December 30, 2019.
***** Correspondence Author

Mohd Aliff*, Senior lecturer, Instrumentation and Control Engineering Section, Malaysian Institute of Industrial Technology, Universiti Kuala Lumpur, Malaysia.

Abdul Halim Hamdi, Master Engineering Technology, Electrical Student, UNIKL.

Ismail Yusof, Head of Section of Instrumentation and Control engineering, Malaysian Institute of Industrial Technology, Universiti Kuala Lumpur, Malaysia.

Nor Samsiah, Senior lecturer, Faculty of Information Science & Technology, Universiti Kebangsaan Malaysia (UKM).

As perspective of industry 4.0, it will create an opportunity for sustainable manufacturing industry in term of economy, environment and communication and as the theme suggest all the automation shall be as easy as push a single button to start any process [2].

Many level of industry have started to moved towards industry 4.0 because of the traceability can be acquired easily and also it is one of the requirement to be a smart factory and ensure the process flow more reliable [3].

To develop cost effective solution for productivity can be achieve by develop a system that integrated with a robotic system [4]. A robotic automation is one of the solutions to replace the human being as the robot will constantly repeated their work without any justification and objection. Furthermore, in the market now already served a high quality of the system in term of efficiency, accuracy, repeatability and others. By replacing human with the robotic system shall increase the effectiveness of the machine because by using robot as the part of automation can make the process more efficient [5]. 6-axis robot are designed to perform a complex task and still delivered the desired outcome. The optimized of each joint can be improved as necessary [6].

Multiple controller is required to communicate with each other, there are several types of protocols can be performed. Ethernet/IP protocol one of the solution to integrated all controller into a single system [7]. This Ethernet/IP or Ethernet/Industrial Protocol had been develop since 2001 by Rockwell Automation and it is feasible to used especially in PLC controller [8].

Vision system is a compatible replacement for human eye because this image processing is used algorithm to detect something compared to human judgement that sometimes effected if the concentration disrupted [9]. Image processing offered a high precision result and it evolved the inspection method in industrial sector for the last decade [10]. With a correct algorithm, a coordinate of material can be detected and transferred to other controller [11].

Nowadays technology offered a lot of flexibility and by adapt with the changes it can help reduce the downtime and increase the productivity [12]. Robotic machining one of the solutions for many types of level in precision cutting industry such as lathe, milling. The architecture for this development consist of various controller [13]. By developed an automation system it can increase the production output rate. Equation (1) is to determine the yearly productivity produced by these machine, where ∂ is machine running hour,

β is working days, χ is working month, γ is machine quantity, ω is monthly average setting time, υ is setting hour, η is reload hour and ρ is average cycle time.

$$\frac{((\partial \times \beta \times \chi \times \gamma) - (\omega \times 12 \times \upsilon))}{\frac{\eta + \rho}{60}} \quad (1)$$

On this paper, the overall purpose is to develop control system for dual NC machine with only single 6 axis robot. In order to achieve that, automation system shall be develop as necessary. The proposed system shall increase the effectiveness of NC machine in term of running hours of the machine. Nevertheless, this system is not limited to NC machine only and it can be implemented to others machine that suit with the capability.

II. METHODLOGY

A.System Concept

PLC has more of advantages compare to the limitation of it and some of advantages of a PLC:

- It has noise protection
- Addition of units (e.g I/O)
- Normal I/O connection and signal

Even though PLC has been develop in late 60's it is still one of major controller for any automation system regardless in any kind of industry level [14]. PLC can be integrated with many types of controller as shown in Fig. 1.

Fig. 1 Integrated System

For this system, controller is integrated with several type of controller as shown in Table 1.

Table. 1 Main controller to integrate

No	Part Name	Manufacturer	Model Number
1	Vision controller	Keyence	CV-X150A
2	Robot controller	Epson	RC-700A
3	PLC controller	Mitsubishi	FC3G-60MT
4	Servo driver	Mitsubishi	SGD7S
5	Stepper Driver	Oriental Motor	RKSD507M-C
6			

Even this system consists of multiple of controller, but it still can communicate with each other by used Ethernet/IP protocol. This protocol allowed the coordinate from camera captured to deliver to robot controller or vice versa. After assign all device with a specific IP address, all devices can react with each other. As example shown in Fig. 2 is how from robot controller it can connect to camera controller and also to trigger it from 3rd party controller.

```
Function cameraConnect As Integer

    SetNet #PORT_NUMBER, g_IPaddress$, g_Port, CRLF, NONE, 0
    OpenNet #PORT_NUMBER As Client
    WaitNet #PORT_NUMBER, 3000
    cameraConnect = ChkNet(PORT_NUMBER)

Fend
Function cameraTrigger(ByVal taskNum As Integer)

    String data$, data1$, data2$, data3$, data4$
    Integer Count

    Print #PORT_NUMBER, "R0"
    Print #PORT_NUMBER, "EXW,", Str$(taskNum)
    Print #PORT_NUMBER, "T1"
    Wait 1

Fend
```

Fig. 2 Source code for vision

Commonly, PLC based automation system is integrate with HMI for make the system more user friendly [14]. Basic operation of HMI is shown in Fig. 3. This HMI will plays vital task between the operator and automation system [15].

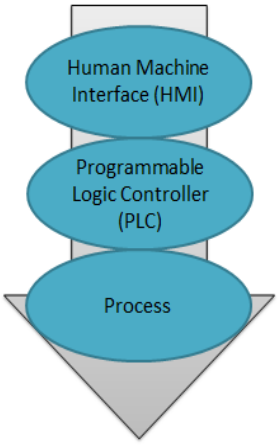

Fig. 3 Major process of HMI [15]

To achieve the objective for this automation system, the 6-axis robot must have the ability to pick and place the products. In order to that, designed for gripper is essential because it is the tool to perform the desired task [16]. As shown in Fig. 4 is the concept for gripper. It has 3 function:

1. Loading at tray
2. Un loading at tray
3. Loading at machine

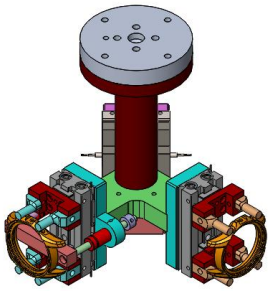

Fig. 4 Gripper design

The layout for automation system is presented in Fig. 5 to Fig. 7 as the access into machine area is using right and left of NC machine and the robot itself it mounted at linear motor in front of the machine. Vision system is placed at the tray A and tray B area where the robot will pick and place the materials. Robot vision systems play an important role in the robot pick-and-place task. They can be used to detect objects, and to measure their location [17]. This vision system is commonly used in industry for a replacement with human eyes because it has the precision technology. In front of this system is a loader A and B. This loaders for load and un-load the material. Each loader can load for 20 tray per time.

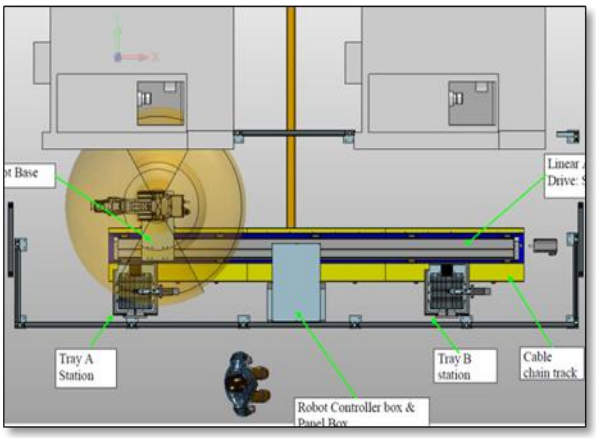

Fig. 5 Automation layout (a)

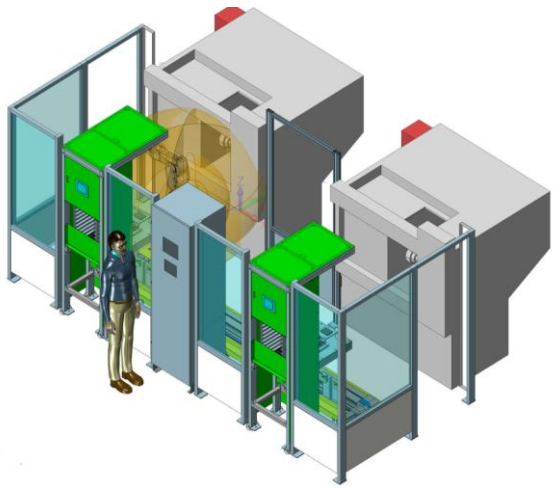

Fig. 6 Automation layout (b)

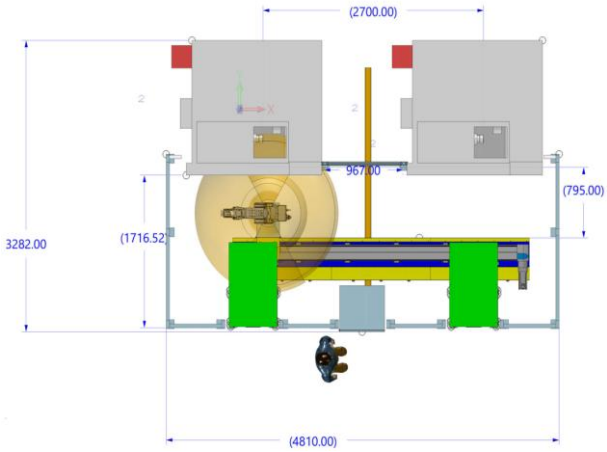

Fig. 7 Automation layout (c)

B. Electrical concept

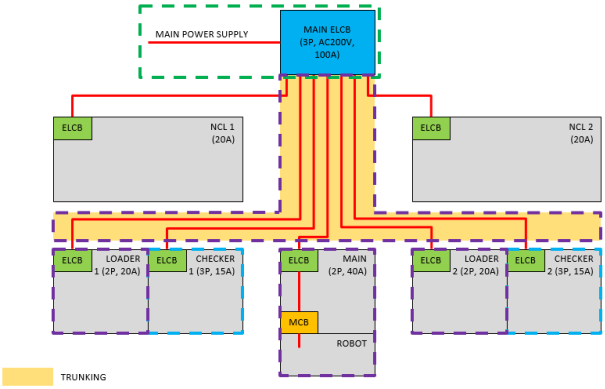

Fig. 8 Electrical design

This system is operated by 200 VAC as shown in Fig. 8 and for each equipment are designed to be protected by earth leakage circuit breaker (ELCB) and miniature circuit breaker (MCB). These 2 devices are installed as a precaution if any abnormality happened from the power source and the system itself. Safety regarding electricity shall be properly taken care because electrical leakage is not something normal eyes can detect it. Nowadays, there is technology available to detect any failure happened at the system and it is one of the solution to protect people from electrical hazards [18].

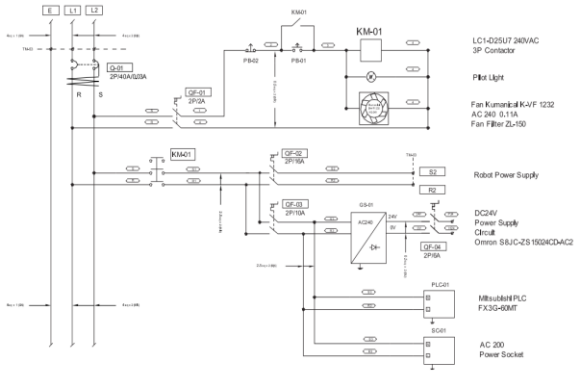

Fig. 9 Main control electrical drawing

Main control drawing for this system is shows in Fig. 9. This design is using Direct Online Starter (DOL) because it is very feasible to use, and it suit with this system. Once power on this system will turn on all the controllers and ready to be execute. For each device it is protected by designated circuit breaker. This circuit breaker would trip automatically if it detected any leakage or over current. Inside this main panel also is properly grounded to prevent any accident and it is compulsory for industry to comply this regulation. On top of that, exhaust fan is installed to make sure the good ventilation to stabilize the temperature inside the panels. All wires carry a heat that generated from the current. It is essential to make sure that this panel are in an appropriate size. This system also equipped with sensors and actuator.

1. Proximity sensors (Omron E2E-X2Y)

Proximity sensor commonly used because of the characteristic of this sensor that can operated in oily environment. The application for this sensor also suitable for many operation [19]. As for this system, this proximity used for positioning the location of the robot as shows in Fig. 10 the connection of these sensors to PLC.

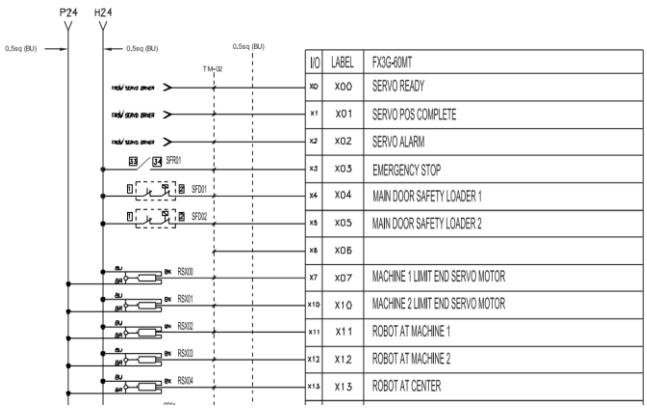

Fig. 10 Proximity sensor connection

This sensors specification are written below:

Sensing distance: **5 mm ±10%**

Set distance: **0 to 4 mm**

Detectable object: **Ferrous metal**

Power supply voltage: **24 to 240 VAC, 50/60 Hz**

2. Reed switch (SMC D-M9NE)

Reed switch sensor commonly found in pneumatic system. It is one of the solution to confirm the position of the cylinder. Before the process can proceed to another task, a confirmation signal from reed switch is required. The fundamental construction of reed switch is using an electromagnetic theory [20]. The wiring diagram is shown in Fig. 11.

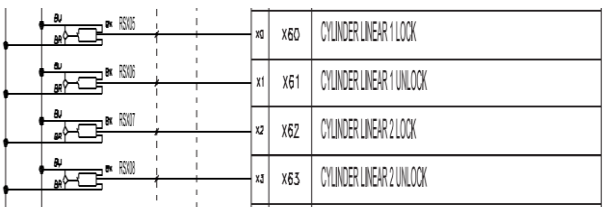

Fig. 11 Reed switch connection

3. Photoelectric sensor (Omron E3Z-R86)

Photoelectric sensor used to detect the present of human in a robot working area. This sensor will trigger and stop all the operation. The detection of this sensor is very accurate and reliable [21]. The connection of this sensor is shown in Fig. 12.

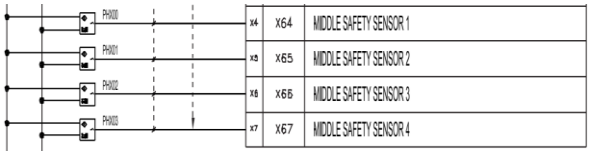

Fig. 12 Photoelectric sensor connection

4. Stepper motor (RLSD507M-C)

Stepper motor is an open loop actuator where it can drive the motor without giving back the actual positioning to the controller. It is drive by given a pulse output from the controller to move and control the speed of the motor. This stepper motor usually used for a positioning process and it consist of multiple stator for a precision positioning [22]. As shows in Fig. 13 is a connection from the driver to the PLC controller. Stepper motor also equipped with an electromagnetic brake to prevent the actuator from move if not in operation

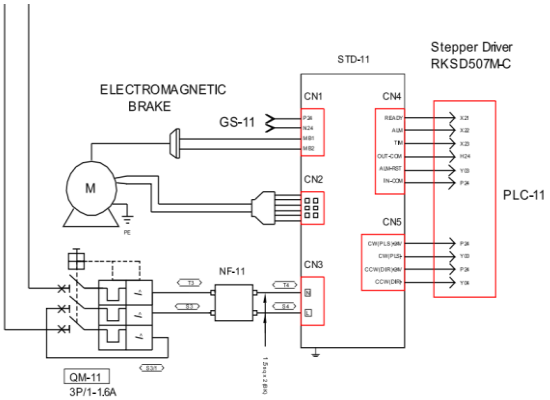

Fig. 13 Stepper motor connection

This sensors specification are written below:

Power supply voltage: **Single phase 110 VAC, 50/60 Hz**

Rated current: **0.75 Amp**

Maximum holding torque: **1.77 N.m**

Step angle: **0.72°**

C. Software Architecture

Simulation of the method to detect an early abnormaloity because from the simulation the parameters can be adjusted and to be fixed before the actual system is develop [23]. Many type of software and tools are provided to run this simulation such as Labview, Matlab and others. This system are used Epson RC+ 7.0 as shown in Fig. 14 to write a souce code and to run the simulation as shows in Fig. 15.

Fig. 14 Software version

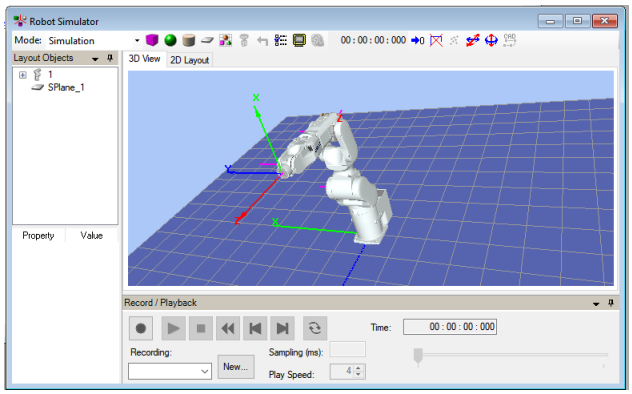

Fig. 15 Simulation interface

Because of this system used 6-axis robot it is crucial to run the simulation to foresee the movement and also the limitation of degree freedom. This software allowed CAD file to be uploaded and 3D model of NC machine can be seen in the simulation. The trajectory of this robot also can be run and to see the path from point to point as shown in Fig. 16.

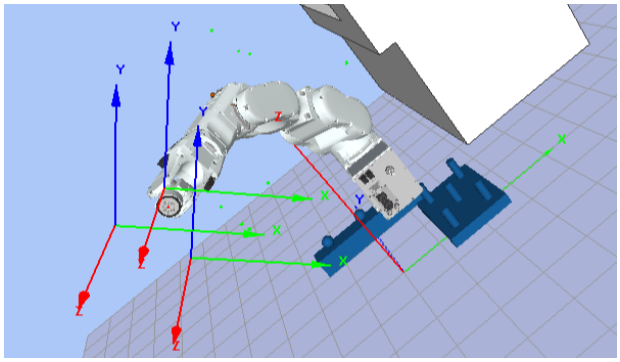

Fig. 16 Trajectory path

III. RESULT

To achieve the objective of this research, integration of multi controller between PLC, vison controller and robot controller must be established. The ideal distance of camera placement is shows in Fig. 17.

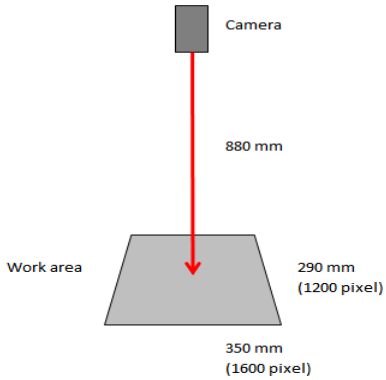

Fig. 17 Camera working distance

Integration between this controllers can create efficient system [24]. From previous research, to develop machine vision with PLC controller can be made but it required an image process algorithm to recognize the burr on metal and sorting it [25].

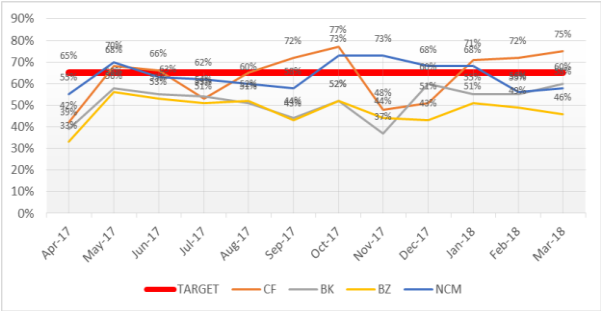

Fig. 18 NC machine rate

This machine rate productivity is consisting of running hour for 23 hours per day running. From Fig. 18, shown 2 types of data, manual operation and single robot operation. Manual operation is categorized into 3 type of material, case frame, bezel case back and bezel. It showed that inconsistency of machine rate productivity as the data from April 2017 to March 2018 is taken. The sample product produced by this NC machine is shown is Fig. 19. By develop an automation system it can increase the machine rate because of the efficiency of automation is reliable.

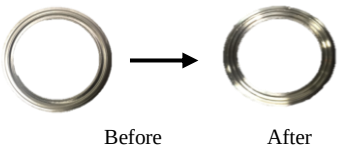

Fig. 19. Part produced

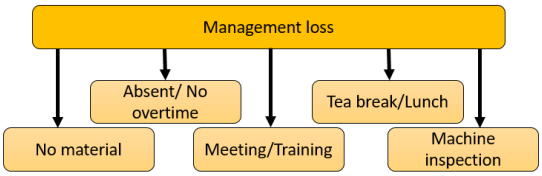

Fig. 20 Management loss

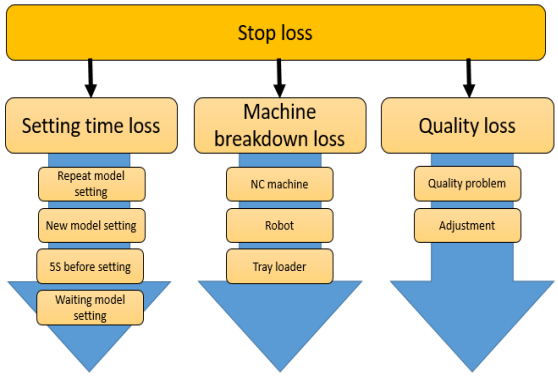

Fig. 21 Stop loss

Manual operation suffers a loss of time running because 2 major factor which is management loss and stop loss. From the 2 major factor it has own sub categorized as shown in Fig. 20 and Fig. 21.

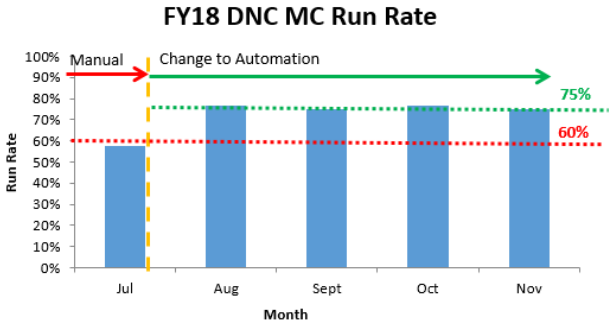

Fig. 22 Results

After collected data for 4 months from August 2018 and November 2018 it showed that 15% or 19266 pieces increase from 60% or 128440 pieces from manual handling as shows in Fig. 22. It proved that the effectiveness of this NC machine can be increase by implemented this system. Equation (1) is to determine pieces produces yearly by manual and automation system by using parameters in Table 2.

Table. 2 Parameters system

No	Items	Manual	Automation
1	Machine running hour	21.5	23
	Working days	22	
2	Working month	12	22
3	Machine quantity	1	12
4	Setting hour	1	2
5	Average setting	200	1
6	frequency/Month	9.09090	200
7	Average setting	909	9.09090909
8	frequency/Day	0.00416	0.0125
9	Reload hour	667	2.75
	Average cycle time	2.75	

IV. CONCLUSION

Overall, development of the control system for dual NC machine with single 6-axis robot can be seen after development of the automation. This system consists of multiple controller and can be integrated to each other for achieve the objective of this research. This system also is not limited to this particular material and can be used for any other suitable material with a change of few parameters. Vision system proved that it has the capability to help created a better system. Automation can be one of the solutions for increase the productivity however the selection of hardware and software must be considered because the technology is highly cost. A proper planning shall be determined in order to have return of investment (ROI) for automation system.

ACKNOWLEDGMENT

This research work is supported by the Universiti Kuala Lumpur through Short Term Research Grant (STR18039). The author would like to thank the research management center of Universiti Kuala Lumpur, for managing the project.

REFERENCES

1. Z. J. Jiao, C. Y. He, J. Wang, and Z. Zhao, "Development and application of automation control system to plate production line," 11th Int. Conf. Control. Autom. Robot. Vision, ICARCV 2010, no. December, pp. 678–681, 2010.
2. T. Stock and G. Seliger, "Opportunities of Sustainable Manufacturing in Industry 4.0," Procedia CIRP, vol. 40, no. Icc, pp. 536–541, 2016.
3. L. Bassi, "Industry 4.0: Hope, hype or revolution?," RTSI 2017 - IEEE 3rd Int. Forum Res. Technol. Soc. Ind. Conf. Proc., 2017.
4. L. Pérez, E. Diez, R. Usamentiaga, and D. F. García, "Industrial robot control and operator training using virtual reality interfaces," Comput. Ind., vol. 109, pp. 114–120, 2019.
5. M. Findeisen, M. Todtermuschke, R. Schaffrath, and M. Putz, "A method for energetic comparison of 6-axis industrial robots and its further scope for resource-efficient plant design," Procedia Manuf., vol. 21, pp. 251–258, 2018.
6. H. Min Jo et al., "Optimal wrist design of wrist-hollow type 6-axis articulated robot using genetic algorithm," Proc. 2018 IEEE Int. Conf. Mechatronics Autom. ICMA 2018, pp. 1486–1491, 2018.
7. Zhihao Ling and Jinshou Yu, "The design of SCADA based on industrial Ethernet," pp. 2786–2789, 2003.
8. E. Alessandria, L. Seno, and S. Vitturi, Performance analysis of Ethernet/IP networks, vol. 7, no. PART 1. IFAC, 2007.
9. J. F. Shi, C. J. Hua, and G. H. Li, "A simplifying method of vision attention simulating human vision in machine vision system," 2010 Int. Conf. Mach. Learn. Cybern. ICMLC 2010, vol. 6, no. July, pp. 3097–3100, 2010.
10. J. Jia, "A machine vision application for industrial assembly inspection," 2009 2nd Int. Conf. Mach. Vision, ICMV 2009, pp. 172–176, 2009.
11. F. Zhong and C. Quan, "Digital image correlation in polar coordinate robust to a large rotation," Opt. Lasers Eng., vol. 98, no. May, pp. 153–158, 2017.
12. N. Girish, K. M. Subbaiah, and K. Upendra, "Establishment of backup system for failed NC robot," pp. 338–342, 2014.
13. A. Verl, A. Valente, S. Melkote, C. Brecher, E. Ozturk, and L. T. Tunc, "Robots in machining," CIRP Ann., 2019.
14. E. R. Alphonsus and M. O. Abdullah, "A review on the applications of programmable logic controllers (PLCs)," Renew. Sustain. Energy Rev., vol. 60, pp. 1185–1205, 2016.
15. V. M. Koshti and S. M. Joshi, "Design of Human Machine Interface for Plc Based Automation System," IFAC Proc. Vol., vol. 40, no. 18, pp. 343–346, 2010.
16. R. Shah and A. B. Pandey, "Concept for Automated Sorting Robotic Arm," Procedia Manuf., vol. 20, no. 2017, pp. 400–405, 2018.
17. H. I. Lin, Y. Y. Chen, and Y. Y. Chen, "Robot vision to recognize both object and rotation for robot pick-and-place operation," 2015 Int. Conf. Adv. Robot. Intell. Syst. ARIS 2015, pp. 1–6, 2015.
18. N. M. Nor and T. Ibrahim, "Domestic Application," no. June, pp. 23–28, 2013.
19. D. Purcaru, I. M. Gordan, and A. Purcaru, "Study, testing and application of proximity sensors for experimental training on measurement systems," 2017 18th Int. Carpathian Control Conf. ICCC 2017, pp. 263–266, 2017.

20. P. Regtien and E. Dertien, Inductive and magnetic sensors, vol. 1, no. C. 2018.
21. M. G. Shahril Shah, A. B. Elmi, A. Nazir, and S. Shukri, "Photoelectric sensor based intelligent track racing car," Procedia Eng., vol. 41, no. Iris, pp. 588–592, 2012.
22. F. Nickols and Y.-J. Lin, Theory III: The Stepper Motor and Its Control. 2019.
23. C. Xiaowei and S. Chuanwei, "The study of robot simulation applications based on the LabVIEW robotics," ICCSS 2017 - 2017 Int. Conf. Information, Cybern. Comput. Soc. Syst., pp. 66–71, 2017.
24. S. Chen, X. Qian, and M. Zhou, "Research of automation steel tape measurement system based on PLC and computer vision technology," 2009 WRI World Congr. Softw. Eng. WCSE 2009, vol. 1, pp. 251–255, 2009.
25. L. Peilin, Y. Zhen, Z. Wenlong, and L. Hong, "An automatic sorting system for sorting metal cylindrical workpiece based on machine vision and PLC technology," 2017 2nd Int. Conf. Robot. Autom. Eng. ICRAE 2017, vol. 2017-Decem, pp. 446–450, 2018.

AUTHORS PROFILE

Mohd Aliff is currently a senior lecturer of Instrumentation and Control Engineering Section, Malaysian Institute of Industrial Technology, Universiti Kuala Lumpur, Malaysia. He received his doctor degree in Engineering from Okayama University of Science in 2016. His research backgrounds are in mechatronics and robotics; particularly in rehabilitation device, intelligent robot and flexible pneumatic actuator. He is a member of Board of Engineers Malaysia and Malaysia Board of Technologists.

Abdul Halim Hamdi is a Master Engineering Technology in Electrical student at UNIKL. He also is an electrical project engineer and has been involved in automation projects since 2016. He is graduated from UNIKL with his course is Bachelor Engineering Technology in Electrical in 2016.

Ismail Yusof is currently a Head of Section of Instrumentation and Control engineering, Malaysian Institute of Industrial Technology, Universiti Kuala Lumpur, Malaysia. He received his Bachelor of Engineering Technology (Mechatronics) from the Universiti Kuala Lumpur-Malaysia France Institute (UniKL MFI) and PhD in Automatic Control & Systems Engineering from the University of Sheffield. His research interests in Control System with Application in Robotic.

Nor Samsiah is currently a senior lecturer at Faculty of Information Science & Technology, Universiti Kebangsaan Malaysia (UKM). She received her BSc (Information Technology) from the Universiti Tenaga Nasional, in 2004 and PhD from the University of Sheffield, in 2016. Her research interests are in machine learning and artificial intelligence.