International Journal of Innovative Technology and Exploring Engineering (IJITEE)
ISSN: 2278-3075 (Online), Volume-9 Issue-4, February 2020

Pneumatic Transport System of a Cotton Picker

Matchanov Rafik Doschanovich, Rizaev Anvar Abdullaevich, Yuldashev Abdurakhim Temirovich, Kuldoshev Davronbek Abdullajonovich, Akhmedov Sherzod Anvarkhon Ugli

Abstract: ***A design of pneumatic transport system of domestic cotton-picking machines is described in the paper; the results of experimental studies of raw cotton transport by air flow are analyzed. Calculations, based on these results, were performed to ensure the smooth operation of pneumatic transport of raw cotton with an estimate of cotton-air mixture concentration. At the same time, the main recommendations are aimed at ensuring the least damage to the cottonseeds.***

Keywords: ***cotton-picking machine, pneumatic transport, suction flow, cotton, apparatus***

I. INTRODUCTION

At raw cotton machine-harvesting and processing, the main operations of its transportation from one technological cycle to another are carried out by pneumatic transport, which significantly reduces mechanical damage to fibers and seeds compared to other types of transport [1-3,5]. In the well-known spindle cotton pickers, the cotton collected by harvesting machines is conveyed to the storage hopper by the air flow of different types: suction, injection and combined ones. They differ from each other by the operating principle. A suction-type air flow is widely used in domestic cotton pickers due to the simplicity of design and low energy consumption (more than by 3-5 times).Raw cotton removed from cotton bolls by spindle drums is fed into the pick-up area of the harvester and, with the spindle reverse and brush-and-slat pullers, it is fed into the receiving chamber through the slot between the puller and the door of the device. The receiving chamber is a parallelepiped-cylindrical pipe with a slot along the height of the puller; the brushes of which dump the collected cotton into the chamber at a certain initial speed. The pipe is open below for air suction and emission of heavy impurities entering the chamber (stones, bully cotton, broken branches of cotton bushes).

Revised Manuscript Received on February 28, 2020.
***** Correspondence Author
Matchanov Rafik Doschanovich*, Doctor of Technical Sciences, Professor of JV "Agrikhim" of the Republic of Uzbekistan. E-mail: raf1942@mail.ru.
Rizaev Anvar Abdullaevich, Doctor of Technical Sciences, Professor, Chief Researcher of the Institute of Mechanics and Seismic Stability of Structures named after M.T. Urazbaev, Academy of Sciences of the Republic of Uzbekistan. E-mail: don_02@mail.ru.
Yuldashev Abdurakhim Temirovich, Candidate of Technical Sciences, Senior Researcher of the Institute of Mechanics and Seismic Stability of Structures named after M.T. Urazbaev, Academy of Sciences of the Republic of Uzbekistan. E-mail: don_02@mail.ru.
Kuldoshev Davronbek Abdullajonovich, PhD**,** Senior Researcher of the Institute of Mechanics and Seismic Stability of Structures named after M.T. Urazbaev, Academy of Sciences of the Republic of Uzbekistan. E-mail: don_02@mail.ru.
Akhmedov Sherzod Anvarkhon Ugli, General Director, LLC "Design and Technological Center for Agricultural Engineering" of the Republic of Uzbekistan. E-mail: myuzdoc@gmail.com.

The fan mounted on the machine frame by telescopic pipes, which are rigidly fixed to the upper part of the receiving chamber, sucks in the air flow from the window and the cotton, receiving the initial speed from the puller, gets into the receiving chamber of the device and is carried away by the air flows and moves to the fan. Here, through an elliptical side window of the fan, it meets the impeller, consisting of blades curved in an Archimedean spiral and, moving with them, it enters the tangential exit of the fan and is transferred by the injected flow to the hopper separator, from where it by inertia reaches the rear wall of the hopper and is accumulated there. Studies conducted by a number of expert shave shown that the raw cotton entering there ceiving chamber of the harvest errata high initial speed (more than 9 m/s) is carried away by the air flows of the pipe and enters the fan, where it hits the walls of the impeller blades and the fan casing and at a speed up to 37 m/s receives mechanical damage (seeds are crushed, fractured, skin is peeled with fiber) [7]. Therefore, the reduction of mechanical damage to raw cotton and seeds remains an urgent and relevant issue in cotton harvesting.

Objective: Study and analysis of the design features of pneumatic transport of raw cotton from the harvester to the machine hopper and the development of recommendations to reduce mechanical damage to cotton seeds under air flow suction.

Methods: Analysis of design and experiments with cotton pickers under various types of pneumatic transport of cotton to the hopper, experimental and theoretical studies.

II. PRELIMINARY RESULTS

Figure 1showsa serial cotton picker, where the raw cotton picked by the harvesting device is transported to the hopper by air flow suction.

Fig. 1. Cotton harvester with air flow suction

The design of a serial suction pneumatic-transport system (PTS) of a cotton picker shown in the Figure 1 includes a fan with an elliptical inlet for a steroidal air collector, which is connected to a pyramid-shaped air collector with unequal sides and asymmetrical edges. The use of multi-knee curved pipelines leads to an increase in aerodynamic drag and thereby reduces the effectiveness of the pneumatic system. With such a pneumatic transport system, the fan speed is 1450-1500 rpm and the cotton seeds damage is more than 3% [7-8].

Figure 2 shows the transport of raw cotton by injected air flows. The advantage of pneumatic transport by injected air flow is that it is unnecessary to run the cotton through the fan, hence, no crushing of seeds by the impeller blades (vanes) occurs. The disadvantage of injected pneumatic transport is the possibility of blowing of cotton-air mixture off the receiving chamber. Therefore, it is necessary to press the ejection jet to obtain suction. This increases the hydraulic loss, which requires a large consumption of fan power.

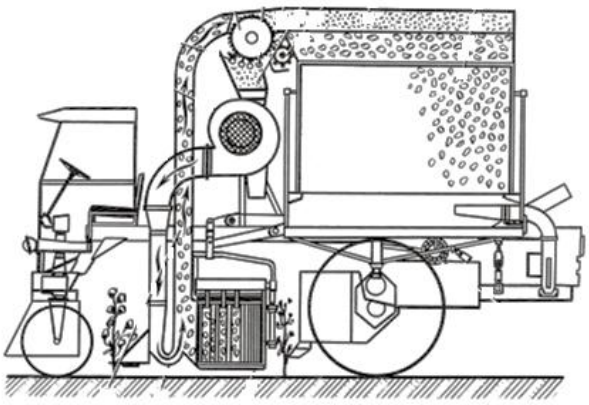

Fig. 2. Cotton harvester with injected air flow

Compared to the suction method, the low damage to cotton seeds and low cotton loss to ground from the receiving chamber of the harvester, requiring 2–3 times increase in fan power, are the distinctive features in raw cotton transport by ejection-injection methods.

Using the suction method, an increase in fan speed to more than 1270 rpm leads to an increase in cotton seeds damage [7].

In order to reduce the damage to cotton seeds, the fans were used with the impellers made of thermoplastics and the impellers with a rubber pad [9]. But these changes did not reduce the damage indices to the established standards (GOST 22587-91).

To ensure a reliable operation of the system, the authors in [4] determined the necessary weight concentration of air and cotton mixture in the pipelines of the pneumatic transport system for the machinery in cotton industry.

The weight concentration of the mixture is a dimensionless quantity, determined by the ratio of cotton weight (G_m) transported per unit time to the total air flow (G_b) for the same period of time:

$$\mu = \frac{G_M}{G_B} \quad (1)$$

In cotton processing industry, the pipelines of diameter of 400-500 mm are used in raw cotton transport. The weight concentration of the mixture at a pneumatic transport system productivity of 10-12 t/h of raw cotton is from 0.6 to 0.8 (μ = 0.6 ÷ 0.8). A dependence graph of raw cotton hovering velocity on its volume weight and clod size, considering the pipe diameter, is shown in Figure 3 [4].

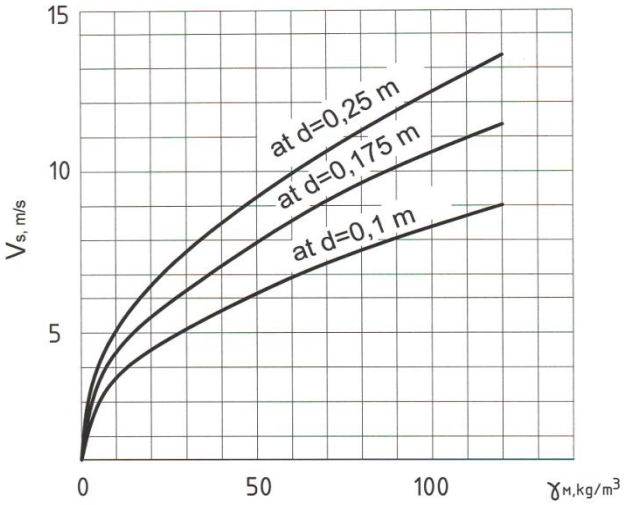

Fig. 3. Dependence of raw cotton hovering velocity on its volume weight at given pipe diameters [4].

According to experiments conducted by Central Research Institute of Cotton Ginning Industry, it was established that the air speed transporting the cotton in pipelines ($V_в$), should be 1.7 times higher than the hovering velocity [4]:

$$V_в = 1{,}7 \cdot V_s \quad (2)$$

Based on the graph (Fig. 2) for the pipe of d = 0.175 m at volume weight of cotton ($\gamma_м$ = 50 kg/m^3, the hovering velocity should be V_s = 8 m/s.

For a reliable operation of the system, the suction air speed in the pipe is:

$V_в$ = 1,7 8 = 13,6 m/s

At μ = 0.6, according to (1), the cotton can be transported in the pipeline at $G_м$ = 0.235 kg per second. This means that with a pipeline diameter d = 0.175 m and an air speed $V_в$ = 13.6 m/s, the mass of transported cotton is $G_м$ = 0.235 kg.

In cotton-picking machines, a pipeline of a diameter $d \leq 0.18$ m and an air speed $V_в$ = 24.5 m/s are used. By calculation determine the change of the weight concentration of mixture (μ) in the pipelines of cotton-picking machines depending on the field yield and the harvester speed.

Calculations were performed for one row of the harvesting apparatus under the following initial data:

- open boll portion of cotton yield per hectare G_p = 2000 ÷ 5000 kg/ha;
- the completeness of machine harvesting Π= 0.88;
- harvester speed $V_м$ = 4.2 km/h = 1.16 m/s;
- row spacing B = 0.9 m;
- the number of suction pipelines when picking from one row n = 2;
- pipeline diameter d = 0.175 m;
- air flow speed in pipelines $V_в$= 24.5 m/s;
- specific gravity of air ($\gamma_в$ = 1.2 kg/m^3).

Cotton transportation per second in one pipeline is determined by:

$$G_M = \frac{G_p \cdot B \cdot V_M \cdot \Pi}{n \cdot 10^4}, \text{kg/s} \quad (3)$$

Air consumption during this time in one pipeline is:

$$G_B = \frac{\pi d^2}{4} \cdot V_B \cdot \gamma_B, \text{ kg/s} \quad (4)$$

According to the above initial data and expressions (3), (4), we obtain:

$$G_M = \frac{G_p \cdot 0{,}9 \cdot 1{,}16 \cdot 0{,}88}{2 \cdot 10^4} = G_p \cdot 0{,}45 \cdot 10^{-4} \text{ kg}, \quad (5)$$

$$G_B = \frac{3{,}14 \cdot 0{,}175^2}{4} \cdot 24{,}5 \cdot 1{,}2 = 0{,}706 \text{ kg}. \quad (6)$$

Table 2 is made by varying the values of G_p in expression (5).

Table 2. The effect of open boll portion of cotton yield on weight concentration of cotton-air mixture (μ)

G_p, kg/ha	2000	2500	3000	3500	4000	4500	5000
$G_м$, kg/ha	0,09	0,112	0,135	0,157	0,18	0,20	0,225
$G_в$, kg/ha	0,706	0,706	0,706	0,706	0,706	0,706	0,706
μ	0,127	0,158	0,192	0,222	0,254	0,283	0,318

Analysis of Table data shows that the weight concentration of mixture in cotton picker pipelines is relatively small (1.9 times or more) compared to the pipelines in pneumatic transport system of cotton ginning industry.

To simulate the process of cotton suction into the pipelines of cotton pickers, a stand shown in Figure 4was made.

Figure 4 shows that to simulate the suction conditions of cotton picker, a serial receiving chamber was taken. The air flow rate through the pipeline is identical to the one in cotton pickers and is Q = 0.458 m^3/s. The pipe diameter of the receiving chamber is d = 0.175m. The suction rate of the lower part of the receiving chamber differs throughout the cross section and the velocity distribution diagram is shown in Fig. 5.

Fig. 4. Stand to determine the hovering velocity of raw cotton segments

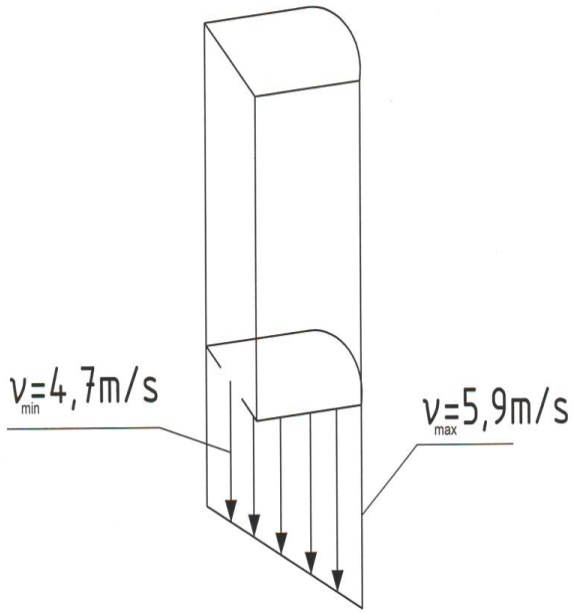

Fig. 5.Velocity distribution diagram of air flow in open lower window of the receiving

The air speed in the receiving chamber is regulated through a slot between the brush puller and the receiving chamber through which the cotton passes. This speed is identified by various authors as the hovering velocity of cotton equal to 4.52 m/s, 5 m/s, 6.15 m/s [7]. The air flow speed in the lower open part of the receiving chamber was measured by the Anemomaster kanomax 6112 model device. Its diagram is shown in Fig. 5.

III. DISCUSSION

An analysis of cotton transport in the cotton ginning industry shows that the weight concentration of mixture is μ = 0.6–0.8. When cotton is harvested by cotton-picking machines, even at high yield G_y = 5000 kg/ha, the weight concentration of the mixture is μ≤0.318. This means that the efficiency of transportation pipelines in a cotton-picker is 2-3 times less compared to the pipeline efficiency in cotton ginning industry. The serial receiving chamber of the cotton picker mechanism of a harvester does not allow an increase in coefficient μ,since an increase in μ leads a decrease in air flow in the pipilinesand suction air speed along the vertical section of the receiving chamber. As a result of a decrease in the suction air speed in the lower part of the receiving chamber, ϑ<6.0 m/s, the cotton segments cannot move up and fall to ground, which causes an increase in raw cotton loss. In this regard, in order to reduce the fan speed, i.e. air flow, it is necessary to modernize the pneumatic system resulting in a decrease in thepneumatic system resistance.

Fig. 6. Modernized cotton picker with suction airflow

Figure 6 shows a modernized cotton picker with an improved PTS, where the fan locations are structurally changed (rotated to 180 °), accordingly, the locations of flexible corrugated pipelines are improved, instead of 90° bend knees and the least radii of curvature (less than 150 mm) bends with significantly greater radii of curvature of the pipelines are formed.

In the modernized pneumatic transport system, the fan speed is 1300-1350 rpm; cotton seed damage is less than 0.8%.

IV. CONCLUSION

A modernized design of pneumatic transport system of a cotton picker has been developed, which ensures fan operation at a speed of less than 1300 rpm compared to serial design witha speed of 1450-1500 rpm.

REFERENCES

1. Jingshan Tian, Xuyi Zhang, Wangfeng Zhang, Hengyi Dong, Zhan Zhao. Leaf adhesiveness affects damage to fiber strength during seed cotton cleaning of machine-harvested cotton. Industrial Crops and Products, Volume 107, November 2017, Pages 211-216.
2. A. Kılıçkan, M. Güner. Pneumatic Conveying Characteristics of Cotton Seeds// Biosystems Engineering, Volume 95, Issue 4, December 2006, Pages 537-546
3. Cotton: World Statistics. http://www.ICAC. org; http://www.statista.com.
4. Roganov B.I., Dzhabarov G.D., Kotov D.A., Baltabaev S.D., Soloviev N.D. Primary cotton processing. –M.: Light industry. -1965, -p. 406-417.
5. Yang Xu-dong, Sun Dong, and Jin Liang-Liang.: The Automatic Control System of Large Cotton Picker. In: 2012 D. Zeng (Ed.): Advances in Control and Communication, LNEE 137, pp. 399–405.
6. Kasimov I., Usarov S. Studies of the zone of front pullers of cotton-picking machines with suction and ejection-injection pneumatic transport systems // Mechanization of Cotton Production. -1990.-No.6.-P.11.
7. Ziyaev H.A., Abstract of diss. “Research and development of a centrifugal fan with blades of a new type for cotton-picking machines.” - 1966, p.22.
8. Research report for 2018 According to the project MV-Atech-2018-92 on the theme “Development and refinement of the operating parameters of the cleaning apparatus with resource-saving working bodies (spindle, drum, etc.) of the pneumatic system of a four-row machine” (intermediate) / Supervisor A. A. Rizaev. Tashkent. IMiSSANRUz. 2018. 108 p.
9. Certificate of authorship377113 / USSR /. Impeller of a fan of pneumatic transport system in a cotton-picking machine. / N.B. Barer, A.G. Arzumanyats, et al./ publ. inB.M. 1973.No. 18.

AUTHORS PROFILE

Matchanov Rafik Doschanovich, Doctor of Technical Sciences, Professor of JV “Agrikhim”of the Republic of Uzbekistan.

Rizaev Anvar Abdullaevich, Doctor of Technical Sciences, Professor, Chief Researcher of the Institute of Mechanics and Seismic Stability of Structures named after M.T. Urazbaev, Academy of Sciences of the Republic of Uzbekistan.

Yuldashev Abdurakhim Temirovich, Candidate of Technical Sciences, Senior Researcher of the Institute of Mechanics and Seismic Stability of Structures named after M.T. Urazbaev, Academy of Sciences of the Republic of Uzbekistan.

Kuldoshev Davronbek Abdullajonovich, PhD**,** Senior Researcher of the Institute of Mechanics and Seismic Stability of Structures named after M.T. Urazbaev, Academy of Sciences of the Republic of Uzbekistan.

Akhmedov Sherzod Anvarkhon Ugli, General Director of the LLC “Design and Technological Center for Agricultural Engineering” of the Republic of Uzbekistan.