International Journal of Innovative Technology and Exploring Engineering (IJITEE)
ISSN: 2278-3075 (Online), Volume-9 Issue-6, April 2020

# Intelligent Application of WSN for Forest Monitoring

**A. Balamurugan, M. Pranesh kumar, R. Muthu kumar**

***Abstract*** *- A Large destructive fire that spread over a forest or area of woodland is a forest fire and another major problem is entering of wild animals into the cities, farm lands, highway roads that causes loss of humungous amount of Property, Wildlife, Ecosystem and Economy. The project is focused on creating a permanent solution for this problems. It consists of an integrated IoT based WSN (Wireless Sensor Network) system to detect, monitor and solve the issue without any manual involvement. With the help of cloud computing, regular monitoring is achieved. The system uses the latest Microcontroller, Wi-Fi communication and precision sensors to monitor the forest. The system also provides a quick response system for the fire and escaping of animals into the farmlands can be controlled at the earliest stage.*

***Keywords*** *- Fire Detection, WSN, Authentication, Notification, Response system, Recognition.*

## I. INTRODUCTION

The project consists of a series of sensors to measure parameters involved in forest fire and detection of the animals. These sensors are connected to a microcontroller which has inbuilt Wi-Fi module that can communicate to the cloud and send data on regular basis. This data is monitored in cloud and for any detection of flame or motion a message is sent to the mobile, notification to the fire department and mail to the rescue department. A response is generated and the default pump gets powered to start sprinkling water thus preventing the spread and stop the problem from the cause. Recognizing the animal and repel them back to the forest if they found at the border. The data and mail points can be tracked to know the problem and thus further accidents can be prevented.

### A. *PROBLEM DEFINITION: FOREST FIRE*

A Large destructive fire that spread over a forest or area of woodland which leads to damage in Wildlife, humans, property and Environment. The major causes are lightning. sparks from rock falls.

**Revised Manuscript Received on April 30, 2020.**
***** Correspondence Author
**A.Balamurugan*,** Professor & Head Department of Computer Science & Engineering, Sri Krishna College of Technology, Coimbatore, Tamil Nadu, India. Email: a.balamurugan@skct.edu.in
**M.Pranesh kumar,** Department of Computer Science & Engineering, Sri Krishna College of Technology, Coimbatore, Tamil Nadu, India. Email: 16tucs138@skct.edu.in
**R.Muthu kumar,** Department of Computer Science & Engineering, Sri Krishna College of Technology, Coimbatore, Tamil Nadu, India. Email: 16tucs124@skct.edu.in



Volcanic eruption or any other manual ignition from the humans on purpose which leads to the following disadvantages: A forest fire sets up the potential for soil erosion to occur, Forest fires always bring death to life of humans and animals, localized air pollution are caused due to the uncontrolled fires, homes can be destroyed without compensation. Entering of wild animals into farm lands and highways roads which also causes loss to the human property and wildlife.

## II. RELATED WORK

[1] They designed an automatic system that tracks motion of human with the help of features such as human face and skin features with the aid of machine learning. [2] Project proposes a UAV device that detects forest fire using the infrared images in real time. [3] Using LANDSAT and ASTER satellite images for determining the forest fire. [4], [7] In Wireless Sensor Network (WSN), the nodes are deployed in various places and uses tcp as a communication protocol. [5] To identify the types of forest fire they used noise power spectrum based on the wireless sensor networks. [6], [12] IoT plays a major role in the medical field. Patients are monitored remotely with help of sensors, microcontrollers etc. MRI images are used with clustering algorithms to predict the diseases. [8] Machine learning can used to detect to forest fire and their positions using algorithms like FPGA and DSP. They uses 3G wireless communication. [9] They proposed a transition mechanism for integration of IPv6 to the current network which gives a high throughput.[10] Classification algorithms are used to classify the unlabeled into respective classes. They proposed a Ant Colony Optimization based algorithm for feature selection which gives a better accuracy.[11] Fire classification algorithms are embedded in UAV to classify the type of fire in the forest.

## III. METHODOLOGY

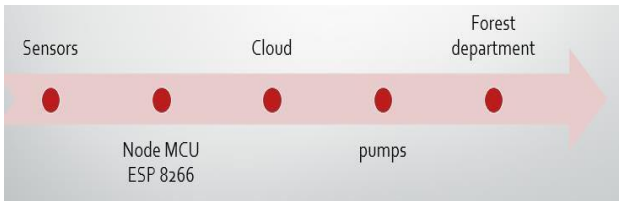


**Fig. 1. Methodology Flowchart**

The methodology remains simple, an integrated device powered by solar energy is setup in various location of the forest based on the rage and efficiency. These devices use the MQTT algorithm to send immediate notifications to the cloud and trigger the attached pump. The following flow chart gives an illustration of the methodology.

The sensors first detect the presence of flame in their area of observation, The microcontroller immediately sends the necessary sensor readings to the cloud and triggers the pump.

The cloud acts on the readings of the sensors and notifies the necessary departments. Motion sensor detects the motion of the animals and trigger the repel systems like flashlights, gas exploders, irritating noises which prevents animals to enter into the human property and into highway roads.

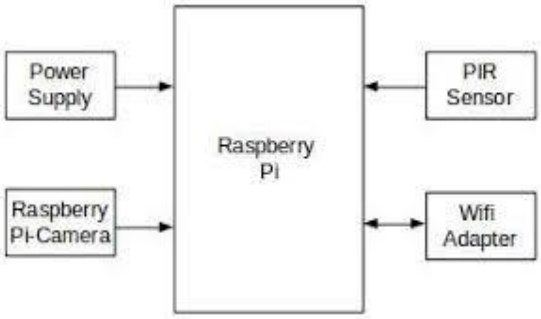


**Fig. 2. Block Diagram**

### A. PROCESS STUDY

IOT devices are becoming a part of the mainstream of proposed systems which incorporates smart devices into the lives of people better than ever. Application of real-time monitoring, tracking and automation in industries and in many sectors has made the IOT as biggest thing in today's world. Growth in the market has provided the technological developments in Internet of Things technology for providing better connectivity between the things and made the lifestyle better. Real-time monitoring and automating the things like tracking of services to reduce manpower and operational costs. The main components in the proposed paper are sensors like flame detector, temperature, light sensor, IR sensor with proper range and Quality checked, micro controller like Node MCU ESP 8266 with Wi-Fi module inbuilt, Raspberry pi. Motor pump, relay module, buzzer are some examples of actuators that are used is this project and other technical support members like data management devices through cloud servers and display LED, some miscellaneous items like Resistors, Diodes, Capacitors, Inductors, wires and the most important solar powering device with battery. All these components can be assembled into a small box. The solar panel may remain outside the box for better performance.

## IV. SYSTEM CLASSIFICATION

### A. SENSORS

FLAME SENSOR

This sensor is used to monitor the areas which are prone to fire. I have found this unit is mostly accurate up to about 20 feet. 760 nm to 1100 nm at this IR wavelength range the sensor is sensitive.

Analog output (A0): Output voltage is based on the thermal resistance.

Digital output (D0): The output low and high signal is based on threshold value.

Pins:

VCC - Input voltage (3v)

A0 - Analog output

D0 - Digital output

GND - Ground pin

This sensor is only taken for Experiment purpose but for the real time application very high range sensors can be used. For huge area coverage usage of drones with high range sensors is also possible which can cover upto 5 Km area at a single sight.

**Fig. 3. Flame Sensor**

GPS MODULE

GPS module is used to track and located the exact location of the fire in the forest. It is capable of locating at a high speed rate. It requires power of 3-5 V and transmit the data at 9600 bps. It also has a backup stored battery which can store the data during power failure. GPS module is connected with the Node MCU, when the sensor notices that the fire has occurred with help of flame sensor it gives the information to the nearby area through Wi-Fi module along with the longitude and latitude values from the GPS module. Here GPS is integrated with an antenna which is used to find the values of the places.

**Fig. 4. GPS Module**

CAMERA MODULE

The Pi camera module is a small sized portable camera that is supported with Raspberry pi board. Camera communicates with the microcontroller using the MIPI (Mobile Industry Processor Interface) camera serial interface protocol. It is generally used in the image processing, machine learning or in real-time tracking projects. the payload of camera is very less so it is used for general surveillance projects . Other than these camera modules Pi can also interfaced with computer webcams using normal USB cables.

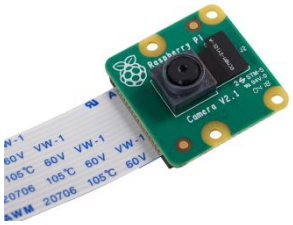

**Fig. 5. PI Camera Module**

## B. MICROCONTROLLER

NODE MCU

Node MCU is a cheap open source board developed by Espressif Systems. It has a mounted with smaller board contains MCU and antenna. Rather than other firmwares NODE MCU firmware uses the a scripting language called Lua. The primary communication is based on Wi-Fi module for this project. We can access the data or control the sensor connections by connecting the hotspot of the users to the Node MCU. When the forest gets fire, the flame sensors automatically sense it and send a notification as "FIRE Detected in sector 1" to the mobile with the help of the app. For this action proper internet connection is required.

**Fig. 6. Node MCU**

RASPBERRY PI

The Raspberry Pi is a small sized computer that runs debian os. It provides a set of General Purpose Input/Output (GPIO) pins that allow user to access electronic components for computing and explore the Internet of Things (IoT). 700 MHz to 1.4 GHz is processor speed of Pi 3 Model B+ and it is 1.5 GHz for the Pi 4. Random access memory (RAM) of PI 3 ranges from 256 MB to 1 GB and it extended to 4 GB for Pi 4. Operating System (OS) and program memory are stored using SD cards.

**Fig. 7. Raspberry Pi**

## V. CLOUD ARCHITECTURE

The cloud is also called as an online version of a hard drive. Instead of having the large storage drives within the computer, you save your files to online virtual servers. When you have internet access you access the files saved on the cloud on any devices. Cloud computing technologies in a platform enabling the Internet of Things process the data, data storage, analytics, knowledge generation and knowledge sharing phases. Most of the data is generated by people and process. Combination of big data and IoT can offer value to energy systems, climate change, and water quality etc. We can use various clouds based on IoT which are open source like Blynk, Thinks speak, Bolt, particle.io, onion, firebase, etc.

## VI. ANIMAL DETECTION

In this Image Recognition model, we demonstrate the workings of a deep learning model that tries to identify animal shown to it and warns the higher officials through sms or e-mail. It also tries to repel the animals back into the forest irritating noises, bright lights etc. It classifies the images using the deep learning model which is trained on several images. For real-time monitoring of the forest, PI camera is used and animals in each frame is recognized using pre-trained model that runs on the raspberry pi microcontroller.

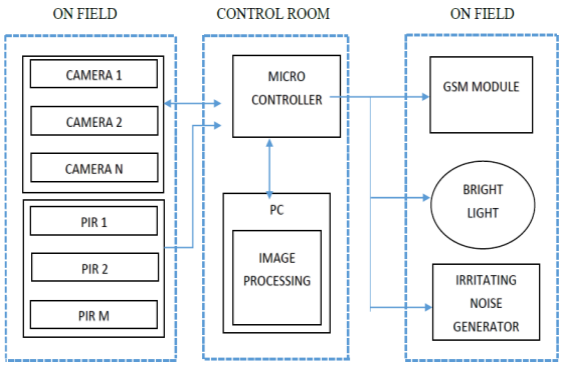


**Fig. 8. Block Diagram**

The result is actually a probability score of image categories (labels) that the model recognizes was trained on. Our best guess is the label with highest probability. The figure 6.2 shows us the performance of the different trained models.

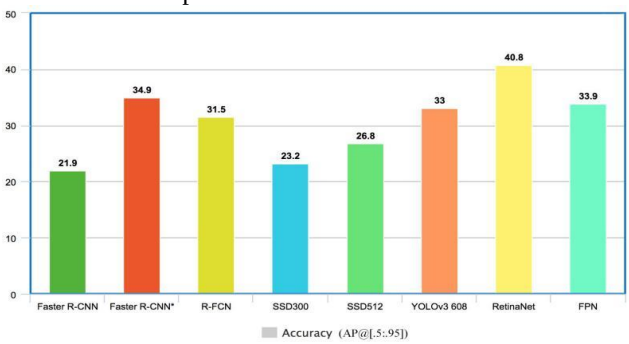


**Fig. 9. Performance Analysis**

## VII. CIRCUIT DESCRIPTION

The Microcontroller and the circuit as seen in the diagram are powered by an External Solar Power Setup which provides 12V to the pump for smooth operations, The pump has strong suction power with silicon tubes attached that does not face damage easily, The pump has two pins (VCC and Ground) where the voltage is drawn from the external supply whereas the Ground is controlled by the Microcontroller through relay or self which into controls the pump. A Piezoelectric buzzer is also connected to the circuit to notify the nearest surroundings, which has two pins (Voltage and Ground) where Voltage is connected to Digital Pins of the Microcontroller (D0,D1..) and the buzzer's GND pin is connected to the GND pin of microcontroller. The Sensor has the pin configuration as mentioned in the paragraph 2.1 which is connected as, A0 analog pin of the sensor is connected with the A0 pin of the Microcontroller and The Voltage and Ground Pins are Connected to the 3V and GND. Small components like Transistor and Mosfet are connected to manipulate Voltage for smooth functioning of the circuit.

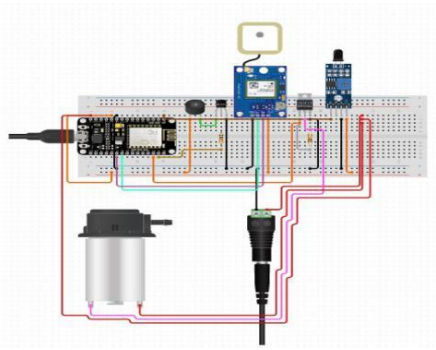

**Fig. 10. Circuit Diagram**

## VIII. IMPLEMENTATION

The Implementation is the most tedious part as we have to take care of the Surrounding influences like plants, animals and atmospheric conditions that can damage the device or disturb its range and efficiency. The implementation range is estimated to be 20 feets if we use the most basic model. The sensor detects the presence of Flame or wild animals in that range and immediately makes the circuit high. The Circuit in turn response to these signal by doing the following things:

1) It makes the buzzer high to create a disturbing and alarming sound.
2) It notifies the cloud about the raise in reading of the sensor and feeds the location.
3) It turns on the pump to sprinkle water to prevent the fire from spreading and trying to cut the source.
4) The cloud receives the readings from the Microcontroller and is programmed to send a notification to the department of forest and a Mail to the Fire department. The notification sent to the forest department also has Location of the device where the fire was detected and the buzzer makes it simple for them to track and follow the lead.
5) Thus proper actions are taken by necessary authorities to prevent the spread of the Fire.

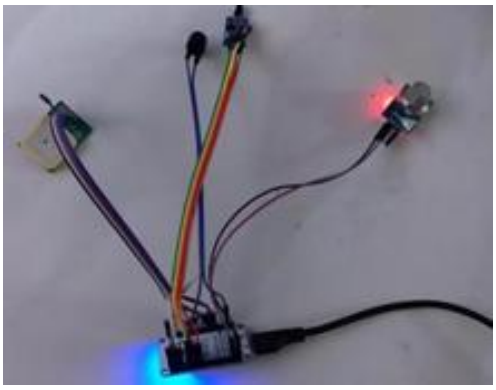

**Fig. 11. Sample implementation circuit**

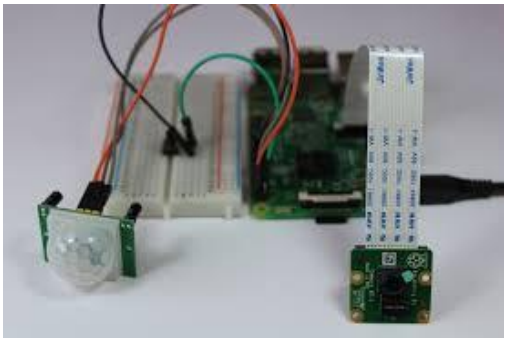

**Fig. 12. Sample implementation circuit**

## IX. RESULT AND ANALYSIS

The various design modules of the fire detection and response using flame sensor and GPS module are outlined. The critical analysis and the various results recorded in the cloud for reducing the animal deaths and entering of animals into farm lands.

### A. FIRE DETECTION

The Fig 13 shows implementation circuit fire detection module.

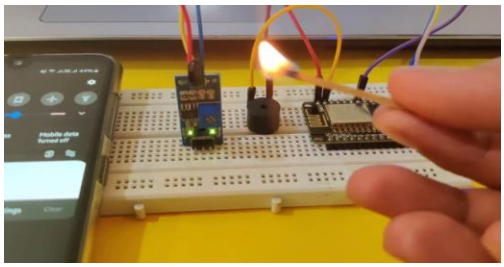

**Fig. 13. Fire Detection Module**

The below figure shows the output image where location of forest fire is displayed in mobile app using blynk cloud.

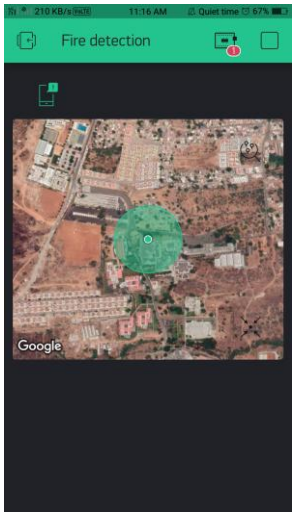


**Fig. 14. Blynk implementation**

## B. ANIMAL DETECTION

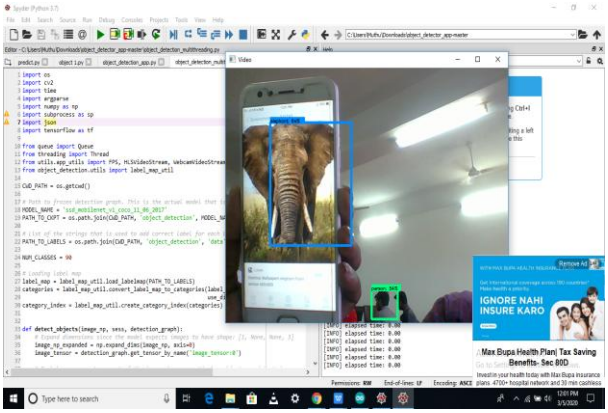

**Fig. 15. Result for animal detection**

The Figure 15 shows us the output of animal detection module which will warn the forest officials if animal is detected in the edge of the forest.

## X.CONCLUSION

The forest fire is a serious issue as it has caused loss of huge amount of land, property and lives of people as well as animals. The paper paves a way to prevent this loss by cutting the supply at the source and preventing the spread at the right time. The project has huge applications in domestic, Industrial, hospitals, Landscape areas like coal mining and petroleum industries to prevent fire accidents and take necessary preventive measures. The project has huge scope in the future where we will be able to cover huge areas of forest land with the help of satellites, thermal images and drones. The project also helps to save animals from road accidents by detecting them at the border of forest and repelling them back into forest. The connectivity of the Wi-Fi in forest areas still remains a technical challenge as using high frequency waves for connectivity may lead to disturbance in birds and animal's life and low frequency may not respond properly, Alternate methods are either too expensive or not effective. The future scope of the project lies in the areas like connectivity of network and range of sensors. Forest still remain an important resource to balance the climate and a possible solution to global warming. Thus when a forest fire occurs not only the valuable forest resource meets damage but the fire tears of the surrounding causing enough pollution by the very source that prevents it.

## REFERENCES

1. *Bhuvaneswari, K. and Rauf, H.A., 2009, June. Edgelet based human detection and tracking by combined segmentation and soft decision. In 2009 International Conference on Control, Automation, Communication and Energy Conservation (pp. 1-6). IEEE.*
2. *Casbeer, D., Beard, R., Li, S., McLain, T. and Mehra, R., 2005. Forest Fire Monitoring Using Unmanned Air Vehicles. In Proceedings of the American Control Conference (pp. 3530-3535).*
3. *Gure, M., Ozel, M.E., Yildirim, H.H. and Ozdemir, M., 2009, June. Use of satellite images for forest fires in area determination and monitoring. In 2009 4th International Conference on Recent Advances in Space Technologies (pp. 27-32). IEEE.*
4. *Guang-Hui, L., Jun, Z. and Zhi, W., 2006, June. Research on forest fire detection based on wireless sensor network. In 2006 6th World Congress on Intelligent Control and Automation (Vol. 1, pp. 275-279). IEEE*
5. *Khamukhin, A.A. and Bertoldo, S., 2016, May. Spectral analysis of forest fire noise for early detection using wireless sensor networks. In 2016 international Siberian conference on control and communications (SIBCON) (pp. 1-4). IEEE.*
6. *Krishnan, M.S., Ragavi, S., RamKumar, M.S. and Kavitha, D., 2019. Smart Asthma Prediction System using Internet of Things. Indian Journal of Public Health Research & Development, 10(2), pp.1103-1107.*
7. *Li, H., Li, G.H., Feng, H.L. and Wang, Z., 2010, April. Research on Forest Fire Monitoring Quality Variation with Wireless Sensor Node Density. In 2010 International Conference on Communications and Mobile Computing (Vol. 3, pp. 339-342). IEEE.*
8. *Longshen, L., Mingxia, S., Xianlin, Z., Yuwen, S., Mingzhou, L. and Yingjun, X., 2011, August. Embedded forest fire monitoring and positioning system based on machine vision. In Proceedings of 2011 International Conference on Electronic & Mechanical Engineering and Information Technology (Vol. 2, pp. 631-635). IEEE.*
9. *Punithavathani, D.S. and Sankaranarayanan, K., 2009. IPv4/IPv6 transition mechanisms. European Journal of Scientific Research, 34(1), pp.110-124.*
10. *Sreeja, N.K. and Sankar, A., 2015. Pattern matching based classification using ant colony optimization based feature selection. Applied Soft Computing, 31, pp.91-102.*
11. *Sudhakar, S., Vijayakumar, V., Kumar, C.S., Priya, V., Ravi, L. and Subramaniyaswamy, V., 2020. Unmanned Aerial Vehicle (UAV) based Forest Fire Detection and monitoring for reducing false alarms in forest-fires. Computer Communications, 149, pp.1-16.*
12. *Tamije, P., Palanisamy, V. and Purusothaman, T., Performance Analysis of Clustering Algorithms in Brain Tumor Detection of MR Images. European journal of scientific research, ISSN, pp.321-330.*
13. *Ahmed, K., Ahmed, F., Roy, S., Paul, B.K., Aktar, M.N., Vigneswaran, D. and Islam, M.S., 2019. Refractive index-based blood components sensing in terahertz spectrum. IEEE Sensors Journal, 19(9), pp.3368-3375*

## AUTHORS PROFILE

**Dr. A. Balamurugan** is currently working as Professor in the Department of Computer at Sri Krishna College of Technology, Coimbatore, Tamil Nadu, India. He received his Master's degree in the year 2001 from Bharathiar University, Coimbatore, Tamil Nadu, India and his Ph.D. in the year 2013 from Anna University, Chennai, Tamil Nadu, India. He has 27 years of teaching experience and 15 years of research experience. His research interests include Wireless and IoT Networks. He has published more than 40 papers in Journals and Conferences and 7 patents. He is a life member of ISTE, ACM, CSI, ACSC, member in IAENG and Senior Member in UACEE.

**M. Pranesh kumar** is pursuing her Bachelor's Degree in Engineering in Sri Krishna College of Technology, Coimbatore, Tamil Nadu, India. His research interests include IoT and Machine Learning.

**R. Muthu kumar** is pursuing her Bachelor's Degree in Engineering in Sri Krishna College of Technology, Coimbatore, Tamil Nadu, India. His research interests include IoT and Machine Learning.