International Journal of Innovative Technology and Exploring Engineering (IJITEE)
ISSN: 2278-3075 (Online), Volume-9, Issue-7, May 2020

# Design for Manufacturing and Analysis of Motorized Bench Vice

**K.Viswanath Allamraju, Rithvik Reddy Polusani, Vutakuri Sai Ranganath, Banda Venkateshwar Reddy, Ambati Pavan Kumar**

***Abstract*: A vice is nothing but a holder which has two holding points at each ends and this holding points help the work piece to stay in place so that the work can be done on the work piece. Now here one of the jaws on the vice is fixed and do not move and the other jaw that is placed in opposite moves so that we can adjust the vise according to the work piece design. So basically the first jaw of the vice helps to hold the work piece in the place and the second jaw can be used to tighten or loosen according to the shape of the work piece. So this is how the basic bench vice works. So the vise can be used for doing many works on it such as to shape a metal object, to make keys, also to cut the object etc.. Like this there are many ways for which we can use the bench vise. Now the paper basically relates to the vises and the scope of improving the working of Bench vise with the help of using a DC motor which helps in the movement of the jaws through the dc motor. Now the main objective of this paper is to make a bench vise which can be operated without any man power and use dc Motor to clamp the work piece so that the work can be done on it. The power to the movable jaw is supplied by the dc motor so that the work can be done on the work piece of any size and shape. We have also tested the vise with various work Pieces just to verify so that it can hold properly while the work is done. Also contact stress analysis is studied at the contact of grip and work piece of diameter 10 mm at various loads such as 10 N , 50 N and 100 N.***

***Index Terms*: Design, Bench vice, Motorized, Contact stress**

## I. INTRODUCTION

In the last decade people had done work in designing the vices in various sizes for holding the devices with various torque power. The main requisite for designing the any mechanical component is the knowledge of simulation tools. With this knowledge one can reduce man, machine and materials and also attain the optimum requirements in both economically and ecofriendly.

**Revised Manuscript Received on May 30, 2020.**
***** Correspondence Author
**K.Viswanath Allamraju***, Mechanical Engineering, Institute of Aeronautical Engineering, Hyderabad, India. akvn87@ gmail.com.
**Rithvik Reddy Polusani Rithvik Reddy Polusani,** Mechanical Engineering, Institute of Aeronautical Engineering, Hyderabad, India.
**Vutakuri Sai Ranganath,** Mechanical Engineering, Institute of Aeronautical Engineering, Hyderabad, India.
**Banda Venkateshwar Reddy,** Mechanical Engineering, Institute of Aeronautical Engineering, Hyderabad, India.
**Ambati Pavan Kumar,** Mechanical Engineering, Institute of Aeronautical Engineering, Hyderabad, India.



Based on the fundamentals of conceptual design, many researchers had proposed their designs in simulation softwares, one of them is Dr K Viswanath Allamraju had done his work in designing the disc brakes with various materials and contact analysis [1-2]. In this paper proposed the design and development of bench vice operated with motor for gripping portable devices. The basic components :

- Bench vice
- Couplings
- Supporting frame
- Supporting Arms
- Dc motors
- Universal Joint
- Screws and Bolts
- Switch

## II. METHODOLOGY

Catia modelling tool is employed in designing the model of MBV. Now the first process of proceeding into this work was to design a vise such a way that it fits our requirement of the project. So we used catia software to design the motorised bench vise so that the design in catia can be used for manufacturing of the project .Various simulation studies were done by using contact stress analysis of disc brakes CFD and ANSYS software [1-4]. Fig.1-5 describes the orthographic views of motorized bench vice (MBV) in Catia Modeling software. [A] First we have decided to design a frame in such a way that it is compact in size and yet it can do all the work of a bench vise. We have also thought of a place where we can mount the motor and the vise

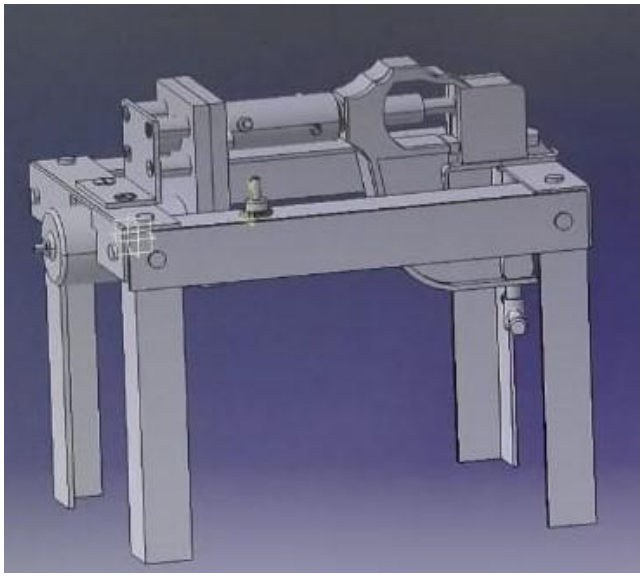

**Fig.1 Catia model of the bench vise**

[B] Top view plane: so this plane was designed by using catia software. Now while designing this part we have kept in mind to place where the motor can be placed, also we had made sure that the top surface that we were designing should be flat so that the motor and the vise can stay in place properly

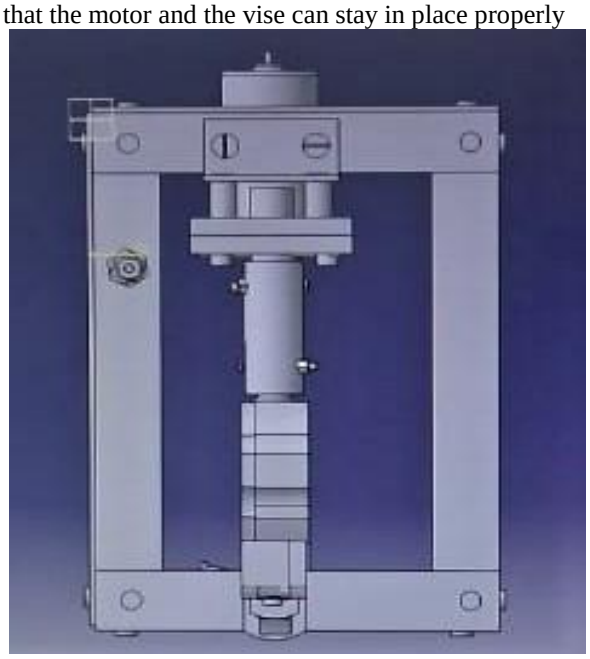

**Fig.2 Top view of the bench vise**

[C] bottom side view : now as shown in figure 3.3 this is the bottom part of the vise, here while designing this part we had made sure that this does not take much place when placed on the ground and the surface which is in contact to the surface should be in rectangular shape so that it does not move when the operation is done or while the motor is running so we have made sure to be rectangular shape.

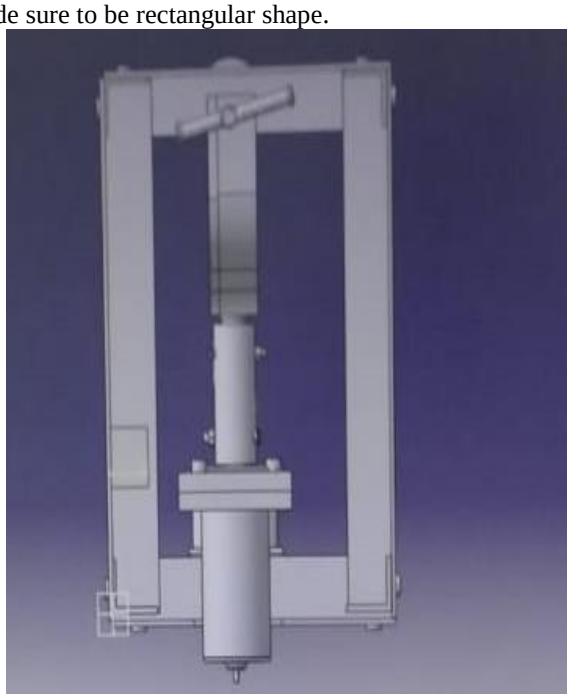

**Fig.3 Bottom of the bench vise**

[D] Front view: so as shown in figure 3.4 this is the front view of the vise. Now while designing this part of the vise we have decided to take the length in such a way that the motor and the rotor of the motor exactly fits with the movable jack of the vise with zero mistake. The length should be so exact that it fits perfectly and does not move.

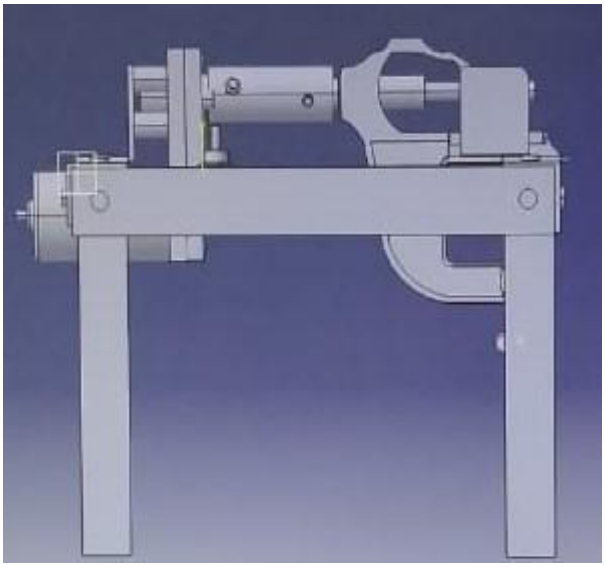

**Fig.4 Side view of the bench vise**

So after all this consideration were taken we had completed all the views or all the side so that they can be used for manufacturing as you can see in figure 3.5

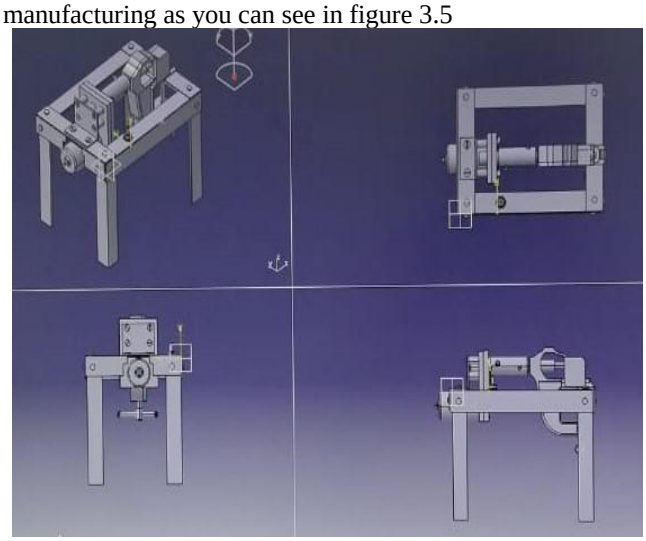

**Fig.5 Complete views of bench vise in catia**

## III. FABRICATION OF MBV

**Materials And Parts Required:**

Fig 6-8 shows the parts are required for assembling the MBV in low cost for gripping the micro devices.

[A] MILD STEEL :

Mild steel is the steel that has a small percentage of iron content in it. This is most commonly used for many things because it is priced low compared to others and also it has metal properties that areacceptable for many of them. As it contain 0.25% of carbon in it which makes it more acceptable for many uses and it is also ductile and malleable.

**Double Jaw Vise Spindle:**

This is a spindle which is connected to a bolt which has different threads but helps it to rotate with the help of spindle is known double jaw vise spindle. This is used for the movement of the jaw against the fixed jaw which helps it to loosen or tighten the gap between the jaws. That is why double jaw vise spindle is used as it can be used for the movement of the jaws by rotating it.

**Fig.6 Double jaw vise spindle**

**Nut And Bolt**

A nut and bolt is used to hold all components in the place without moving so that everything can function properly. With the help of these partners both nut and bolt with the help of threat they stay in place and help the joint secure by placing the nut and bolt in the hole. The most common type of bolt that we see now a days is hexagonal type of bolt which has same type of hexagonal bolt to support it.

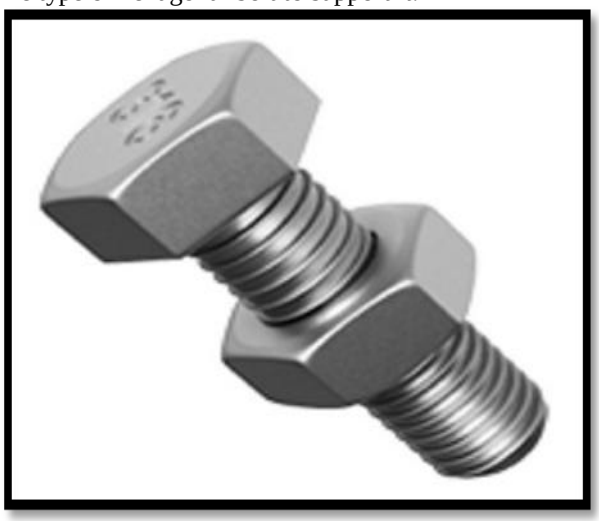

**Fig . 7 Nut and bolt**

**Jaws**

The jaws in the vise are used to hold the work piece. It is generally made up of cast iron. Which makes it strong but it becomes brittle when load is applied on it, which makes it perfect for this type of job. There are also different jaws that are made up of steel that is little bit more expensive when compared to cast iron but it is better than that of the cast iron. These are connected to the thread that is called buttress threat which helps it to carry lot of lot and tension in one way but we can easily unscrew it without any problem. Although the face of these vises are generally made up of the hard steel, it is good but there is a problem when handling soft work piece which tend to break when more load is applied on it.

MOTOR BRACKET :

This is the bracket which is used to hold the motor in place and helps in connecting the motor to the frame which does help to motor stay in place while it is running. And it also improves the stability when compared to the other methods.

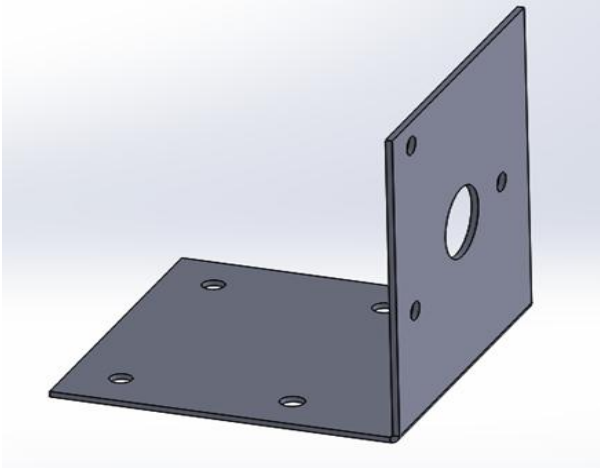

**Fig.8 Motor bracket for Dc motor**

**Dc Motor:**

Dc motor is also known as direct current motor in this case the motor converts the electrical energy to mechanical energy, which indeed help the jaws to move with the help of the dc motor. The most common forces that are produced by the dc motors are magnetic force due to the coil winding. They also have a mechanism which helps them to change the direction as it can move both clockwise and anti-clock wise depending on the requirement

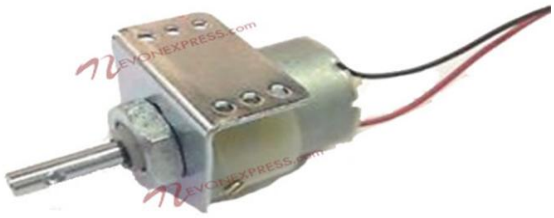

**Fig.8 Dc motor**


**Fig.9 Fabricated MBV**

Fig.9 represents the proposed model of fabricated motorized bench vice. It is fabricated after through studies in simulation in CATIA modeling. Still structural analysis of individual parts and contact analysis at grips are to be done.

## IV. CONTACT STRESS ANALYSIS

Contact stress analysis is employed to observe the contact stress between cylindrical 10 mm diameter object one and bench vice gripper surface (object 2). The length of the gripper is 40 mm. Object 1 and Object 2 materials are stainless steel AISI 301 HV 400. The Poisson's ratio is 0.29 and modulus of elasticity is 180 GPa and maximum stress is 1100 MPa. Force applied is 10 N and length of contact is 40 mm. Fig.10 and Fig. 11 shows the maximum stresses developed on the contact surfaces in relation to depth from contact surface in mm.

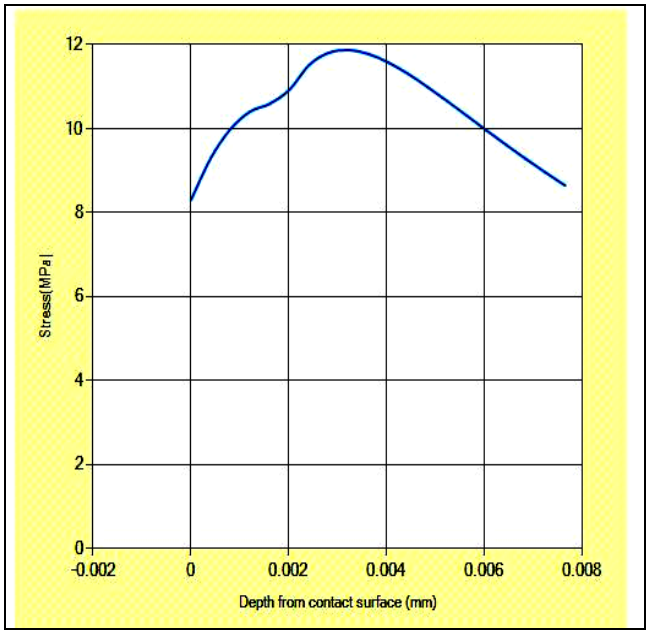


**Fig.10 Variation of depth of contact on surface in relation to stress of object 1at 10N**

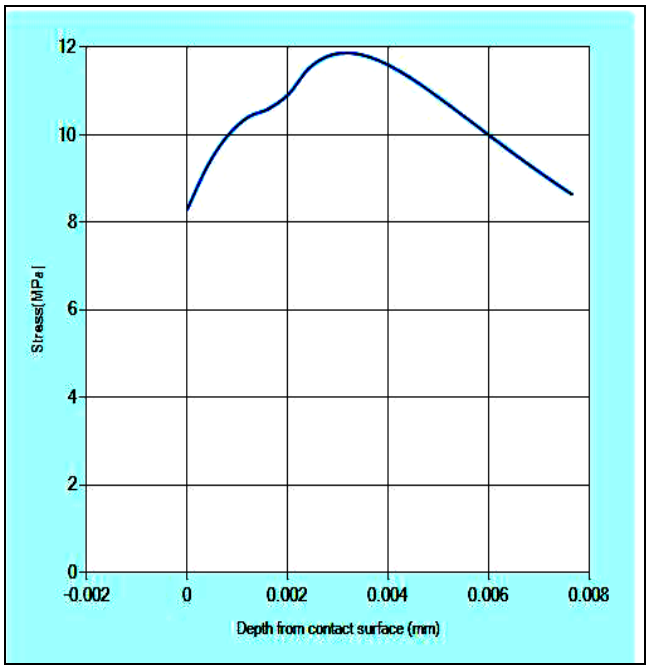


**Fig.11 Variation of depth of contact on surface in relation to stress of object 2 at 10 N**

It is observed that the contact stress is 39.5 MPa, The maximum shear stress occurred is 11.9 MPa, depth of maximum shear stress is 0.003 mm and the rectangular contact area width is 0.008 mm. Fig.12 and Fig.13 demonstrates the maximum shear stress variation with the depth from contact surface at the load of 50 N. The maximum contact stress observed on both the contact surface is 88.4 MPa , The maximum shear stress occurred is 26.6 MPa, depth of maximum shear stress is 0.007 mm and the rectangular contact area width is 0.018 mm.

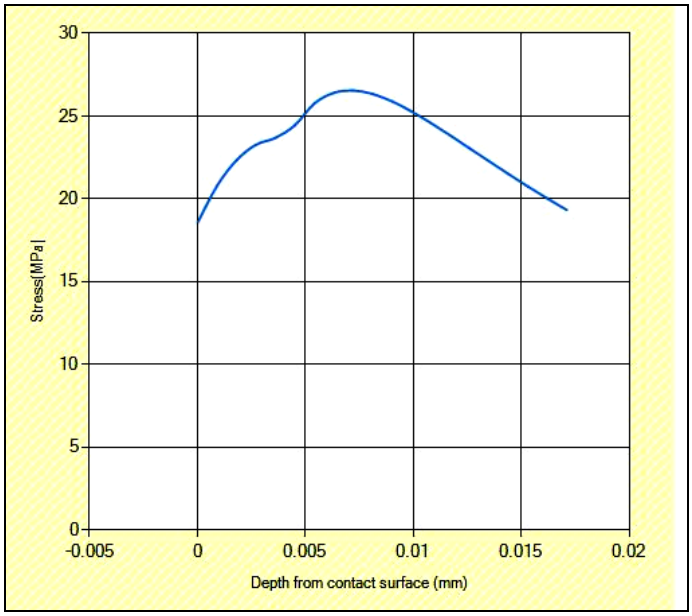


**Fig.12 Variation of depth of contact on surface in relation to stress of object 1at 50 N load**

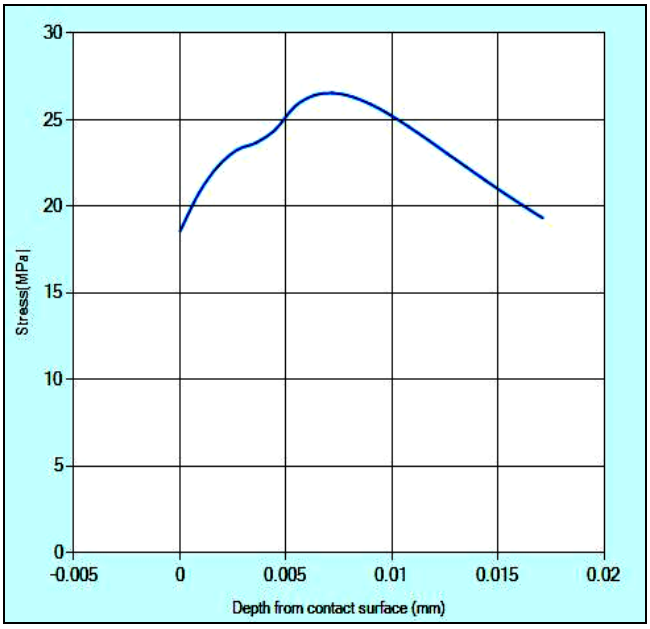


**Fig.13 Variation of depth of contact on surface in relation to stress of object 2 at 50 N load**

Fig.14 and Fig.15 demonstrates the maximum shear stress variation with the depth from contact surface at the load of 100 N. The maximum contact stress observed on both the contact surface is 125.1 MPa, The maximum shear stress occurred is 37.6 MPa, depth of maximum shear stress is 0.01 mm and the rectangular contact area width is 0.025 mm.

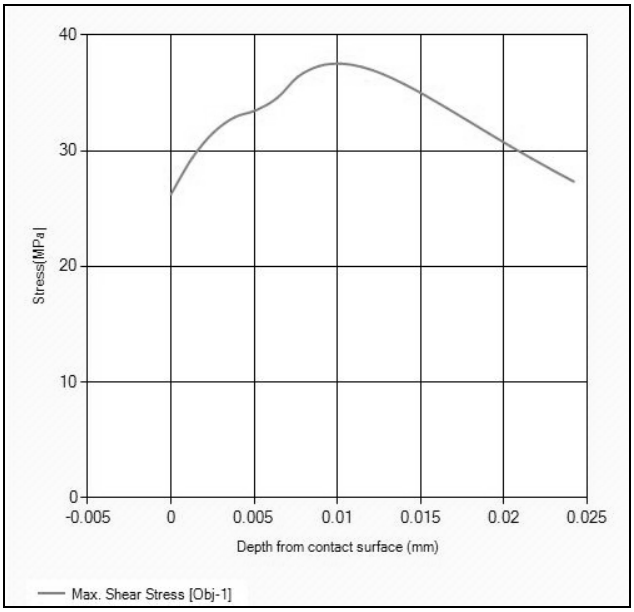


**Fig.14 Variation of depth of contact on surface in relation to stress of object 1at 100 N loads.**

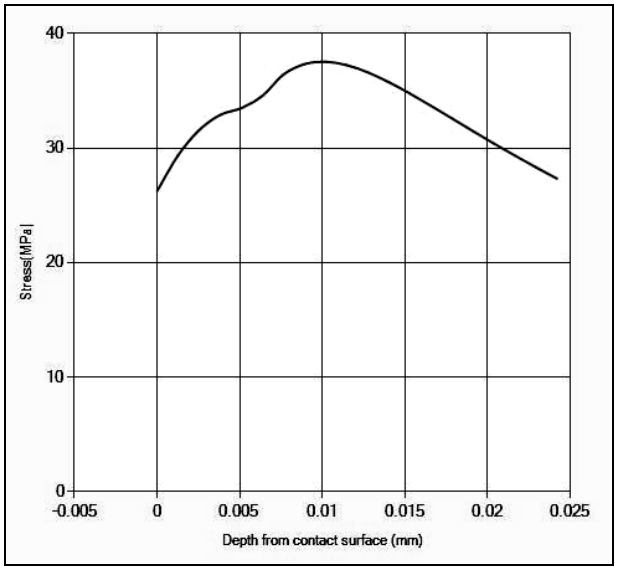


**Fig.15 Variation of depth of contact on surface in relation to stress of object 2 at 100 N loads**

## V. CONCLUSION

In this paper presented the procedure for developing and fabrication of MBV with low cost. Contact stress analysis is done at grip and work piece of diameter 10 mm. It is done at various loads such as 10 N, 50 N and 100 N. The maximum contact stress observed at the load of 100 N of the same materials. This vice can be useful for gripping the micro devices, low weight devices and electrical circuit boards and micro processors. Start-up can be started with this device.

## REFERENCES

1. K Viswanath Allamraju , Structural and thermal analysis of disc brake with slots, International journal of Engineering and Technology( IJEAT), Volume-9 Issue-3, August 2020, pp.903-907.
2. K Viswanath Allamraju 'Contact stress Analysis of Tyre and Mild Steel Plate' (IJEAT)', ISSN: 2249- 8958 (Online), Volume-9, Issue-2, December 2019, Page No 5059-5061..
3. Rajagopal, T. K. R., Ramachandran, R., James, M., Gatlewar, S. Ch., Numerical investigation of fluid flow and heat transfer characteristics on the aerodynamics of ventilated disc brake rotor using CFD, Thermal Science 18 (2) 2014, pp. 667–675.
4. Zhang, J., Xia, C., Research of the transient temperature field and friction properties on disc brakes, Proceedings of the 2nd International Conference on Computer and Information Applica- tion, 2012, pp. 201–204.

## AUTHOR PROFILE

**K Viswanath Allamraju,** completed his M-Tech from **MANIT Bhopal** and PhD from **NIT Warangal**. His research areas are finite element method, neural networks, material characterization of metals and composite materials, vibration analysis and machine design. He has published more than 50 articles in various International journals (Scopus indexed). He had participated 60 International conferences at various IITs and IISC.

**Mr Rithvik Reddy Polusani** is a UG student in the Department of Mechanical Engineering at Institute of Aeronautical Engineering, Dundigal, Hyderabad, India.

**Mr Vutakuri Sai Ranganath** is a UG student in the Department of Mechanical Engineering at Institute of Aeronautical Engineering, Dundigal, Hyderabad, India

**Mr Banda Venkateshwar Reddy** is a UG student in the Department of Mechanical Engineering at Institute of Aeronautical Engineering, Dundigal , Hyderabad, India

**Mr Ambati Pavan Kumar** is a UG student in the Department of Mechanical Engineering at Institute of Aeronautical Engineering, Dundigal, Hyderabad, India