International Journal of Innovative Technology and Exploring Engineering (IJITEE)
ISSN: 2278-3075 (Online), Volume-9 Issue-8, June 2020

# Wind Mill Shaft Optimization Based on layer Orientation Angles using Composite Materials

**S. D. Pawar, R. P. Badde, T. G. Raut, A. S. Chorge, O. V. Dixit**

***Abstract - This paper presents an application of Finite Element Analysis (FEA) for strength improvement of wind mill shaft. Also provides fundamental knowledge of transmission shaft analysis using composite material. The existing shaft is modelled using CATIA and analyzed using ANSYS 16.0. The results for stresses generated are shear stress 68.298MPa, von-mises stress 119.2MPa and deformation is 3.3905mm. First optimization is done based on fibre orientation angles of composite material. Further alternate material selection is done through study and optimization analysis is done for the same. Carbon epoxy-UD selected as material and gives final stresses as 22.974MPa and deformation is 1.255mm. The torsion deflections were obtained experimentally. The results of experimental study and FEA results are found same as infinite life.***

***Keywords — Wind mill shaft; Optimization; composite material; fiber orientations.***

## I. INTRODUCTION

**1.1Windmill:** A windmill is a plant that changes over the vitality of wind into rotational vitality by methods for vanes called sails or cutting edges. Hundreds of years back, windmills as a rule were utilized to process grain, siphon water, or both. In this manner they regularly were gristmills, wind siphons, or both. Most of current windmills appear as wind turbines used to produce power, or wind siphons used to siphon water, either for land seepage or to separate groundwater.

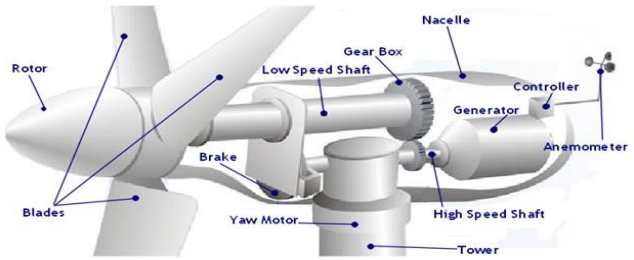


**Fig 1: Wind Mill components**

**Revised Manuscript Received on June 30, 2020.**
* Correspondence Author
**Mrs. Swati Dhartiraj Pawar***, Assistant Professor, Department of Manufacturing processes & Renewable Energy, Dnyanshree Institute of Engineering & Technology, Sajjangad Road, Satara, Maharashtra, India.
**Mr. Rohit Pramod Badde,** Assistant Professor, Department of Manufacturing processes & Renewable Energy, Dnyanshree Institute of Engineering & Technology, Sajjangad Road, Satara, Maharashtra, India.
**Ms. Trupti Gopal Raut,** Assistant Professor, Department of Manufacturing processes & Renewable Energy, Dnyanshree Institute of Engineering & Technology, Sajjangad Road, Satara, Maharashtra, India.
**Mr. Amit Sunil Chorge,** Assistant Professor, Department of Manufacturing processes & Renewable Energy, Dnyanshree Institute of Engineering & Technology, Sajjangad Road, Satara, Maharashtra, India.
**Mr. Onkar Vijay Dixit**, Assistant Professor, Department of Manufacturing processes & Renewable Energy, Dnyanshree Institute of Engineering & Technology, Sajjangad Road, Satara, Maharashtra, India.



### 1.1.1 Shaft of Wind Turbine

The shaft is associated with the rotor. At the point when the rotor turns, the pole turns also. Along these lines, the rotor moves its mechanical, rotational vitality to shaft which enters to an electrical generator on the opposite end.

### 1.2 Composite Materials

Composite materials (composites for short, circulation appeared on Figure 1) are made all the while by at least two materials with limitlessly unique mechanical and/or concoction properties which stay discrete and are plainly recognizable in perceptible or infinitesimal scale inside the completed part. There are two classifications of materials included: strengthen and filler. In any event one piece from every class should essentially be available. Filler encompasses and underpins the fortification to keep up common relative position. Fortification is including its exceptional mechanical properties so as to improve the mechanical properties of filler. Collaboration produces mechanical properties out of reach by individual taking an interest materials and a wide scope of fillers and fortification permits the creator to choose the most suitable item blend.

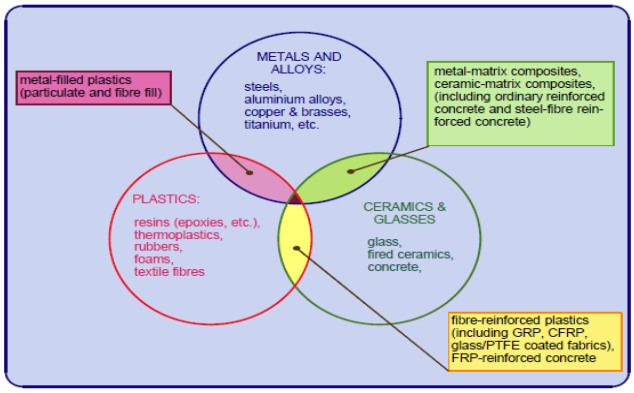


**Fig 2: Relationships between Classes of Engineering Materials, Showing the Evolution of Composites**

Covers are composite materials comprising of fillers and fortifications as filaments/textures. Fillers are utilized as tars of various kinds relying upon application and wanted properties. The most celebrated of them are polyester, vinyl ester, epoxy, phenol formaldehyde (PF), polyimide (PI), polyamide, polypropylene (PP), polyether ether ketone (PEEK). They have diverse mechanical properties, various terms of utilization, warm extension and obstruction. As support textures are utilized weaves material, twill or glossy silk or single-move and bi-pivotal or tangle with folio (powder, emulsion). Additionally, likewise utilized are independent groups of filaments called paddling, utilized for longitudinal fortification parts and manufacture of weight tanks. The filaments are generally glass, carbon, and half breed boron - woven to different kinds so as to get extraordinary properties.

**1.2.1 Unidirectional (Tape):**

Unidirectional get ready tapes have been the standard inside the avionic business for a long time, and the fiber is commonly impregnated with thermosetting saps. The most widely recognized technique for make is to draw collimated crude (dry) strands into the impregnation machine where hot softened pitches are joined with the strands utilizing warmth and weight. Tape items have high quality in the fiber heading and for all intents and purposes no quality over the strands. The filaments are held set up by the sap. Tapes have a higher quality than woven textures.

**1.2.2 Bidirectional (Fabric):**

Most texture developments offer more adaptability for layup of complex shapes than straight unidirectional tapes offer. Textures offer the alternative for sap impregnation either by arrangement or the hot liquefy process.

For the most part, textures utilized for auxiliary applications utilize like filaments or strands of a similar weight or yield in both the twist (longitudinal) and fill (transverse) bearings. For aviation structures, firmly woven textures are normally the decision to spare weight, limiting tar void size, and keeping up fiber direction during the manufacture procedure.

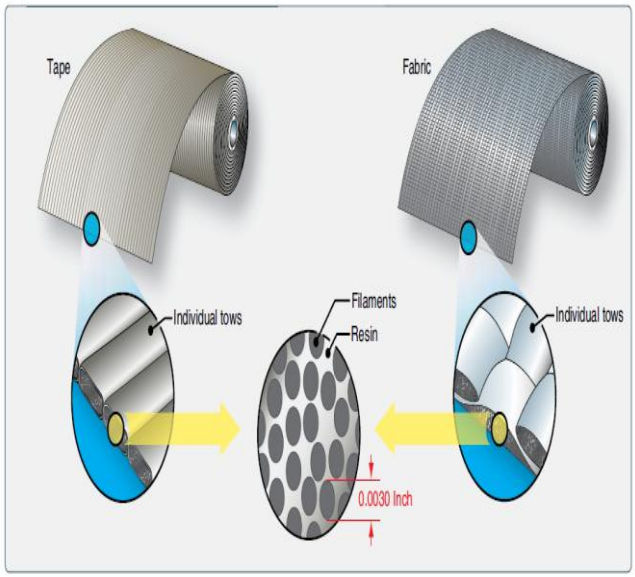


**Fig 3: Tape and Fabric Products**

Woven basic textures are normally developed with support tows, strands, or yarns interlocking upon themselves with over/under situation during the weaving procedure. The more typical texture styles are plain or glossy silk weaves. The plain weave development results from every fiber exchanging over and afterward under each converging strand (tow, group, or yarn).

With the regular glossy silk weaves, for example, 5 tackle or 8 bridle, the fiber groups cross both in twist and fill bearings evolving over/under position less as often as possible.

These glossy silk weaves have less crease and are simpler to misshape than a plain weave.

With plain weave textures and generally 5 or 8 tackle woven textures; the fiber strand include is equivalent in both twist and fills bearings. Model: 3K plain weave regularly has an extra assignment, for example, 12 x 12, which means there are twelve tows for each inch toward every path.

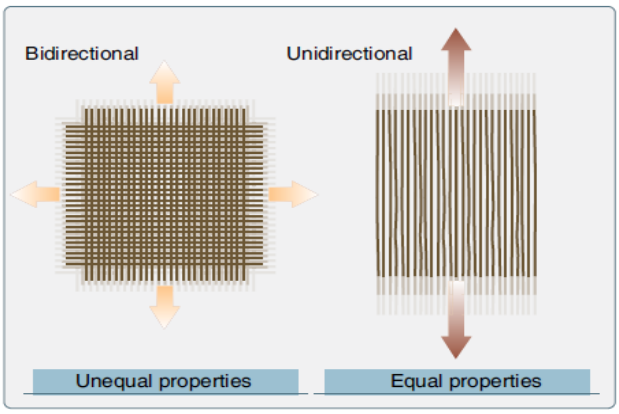


**Fig 4: Bidirectional and unidirectional material properties.**

**1.3 Literature review:**

H. Kim et. al. recommended that the out-of-plane properties can even now be expanded further by utilizing CNMs by means of compelling handling procedures. It is likewise an ideal opportunity to consider scale-up handling all the more genuinely 20 years after the primary disclosure of CNTs. Up until now, adjusted CNTs on carbon filaments have demonstrated most encouraging outcomes in mechanical property upgrade for carbon fiber composites, yet this might be the most costly strategy to fuse CNTs into carbon fiber composites and has a constraint for scale-up preparing. Thus, practical and viable handling strategies ought to be conceived further to see all the more genuine uses of CNMs for carbon fiber composites.

Mark Bruderick et. al. talks about the carbon fiber inception and uses of the equivalent in Automobile industry. The plan and investigation, materials, procedure, and execution of these creative composite structures are talked about. This work presents the three Viper basic frameworks that utilize the high modulus of carbon fiber SMC to accomplish remarkable solidness in lightweight structures. Mass decreases and solidness upgrades are recorded via carbon fiber over glass fiber. Pliable, Bending and Impact quality increments with expansion of filler material, ZnS filled composite shows essentially great outcomes than TiO2 filled composites, Impact sturdiness esteem for unfilled glass composite is more than filled composite is deduced in the paper by Patil Deogonda et. al. The paper of Darren A. Dough puncher et. al. examines about late progressions in carbon fiber materials. Audit of the creators give the setting of topic significance, a cost correlation of potential minimal effort carbon strands, a short survey of authentic work, a survey of later work, and a constrained specialized conversation followed by suggestions for future headings. As the accessible material for survey is restricted, the creator incorporates numerous references to freely accessible government reports and looked into procedures that are commonly hard to find.

## II. OBJECTIVES

- To analyse existing wind mill shaft using ANSYS.
- To study composite Material for optimization analysis.
- Optimization of shaft based on composite material and fibre orientations.

Optimization (here it referred as the selection of best solution from available combinations) is done using iteration method.

## III. EXISTING SHAFT ANALYSIS

### 3.1 3D Model of shaft

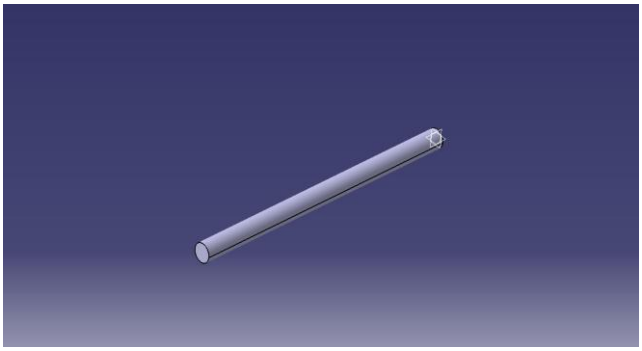

Fig 5: CAD Model – Solid Shaft

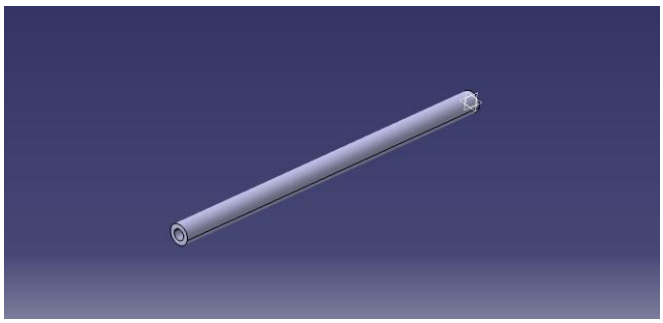

**Fig 6: CAD Model – Hollow Shaft**

### 3.2 Analysis of solid shaft

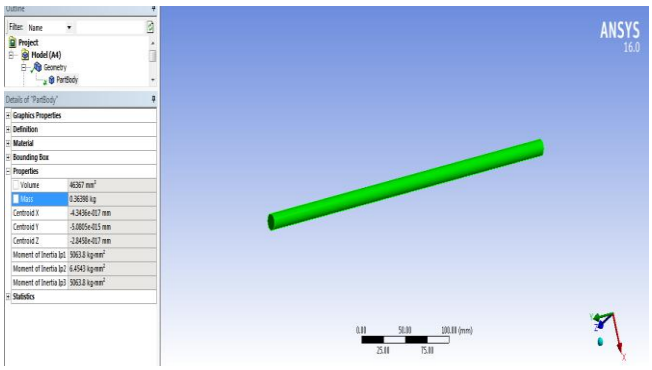


**Fig 7: Solid Shaft imported in ANSYS with weight**

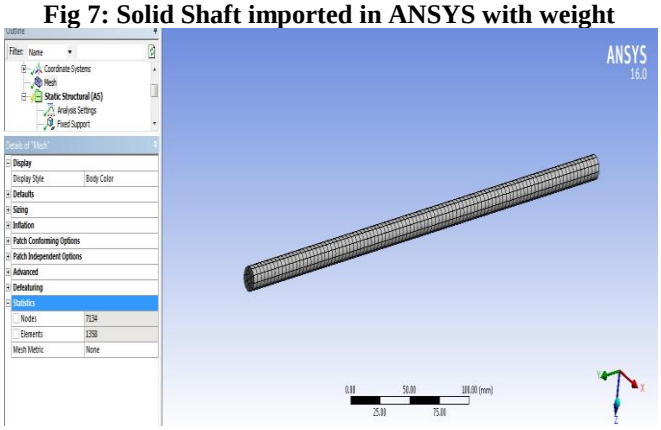


**Fig 8: Meshing of the shaft (Hexahedron elements)**

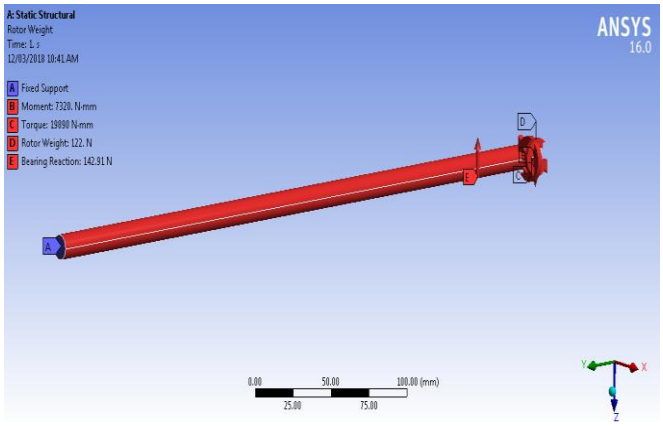


**Fig 9: Loading (Rotor weight + Moment + Torque)**

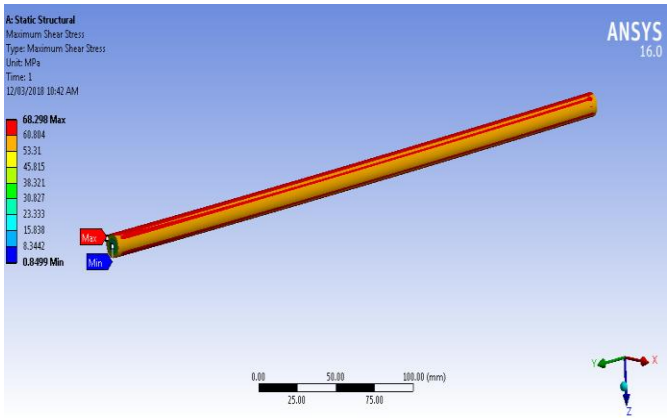


**Fig 10: Shear Stress in Solid shaft for loading**

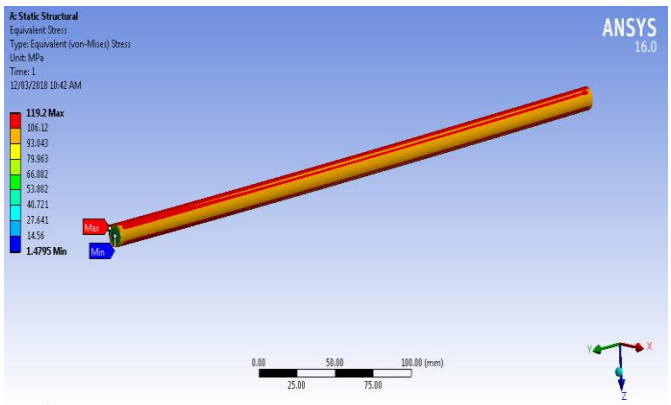


**Fig 11: Von-mises Stress in Solid shaft for loading**

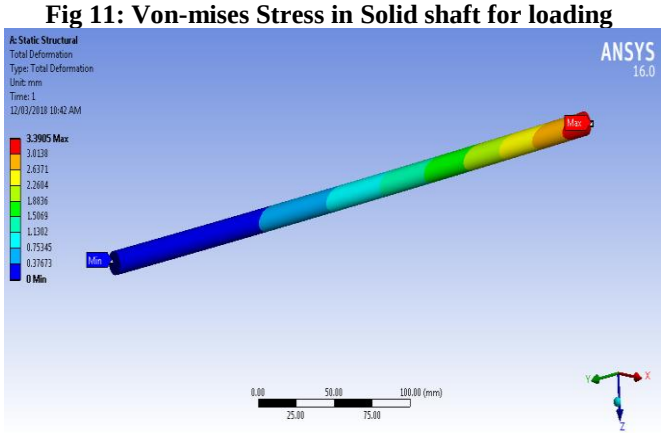


**Fig 12: Deformation in Solid shaft for loading**

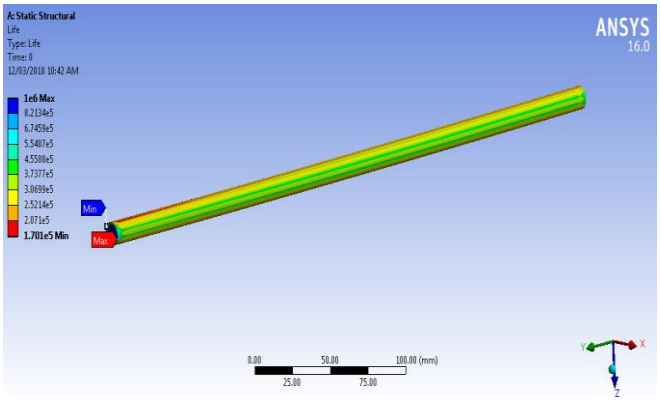


Fig 13: Life of the Solid Shaft for loading

### 3.3 Analysis of Hollow Shaft

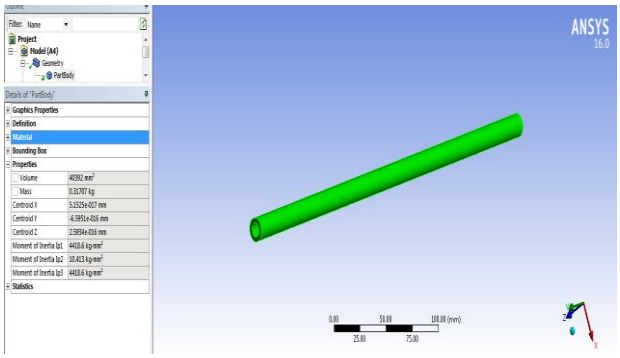


Fig 14: Hollow Shaft imported in ANSYS with weight

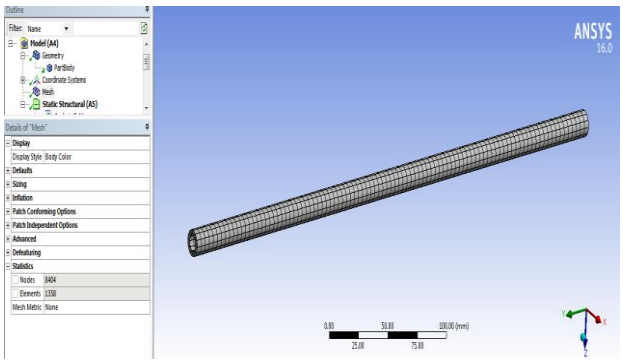


Fig 15: Meshing of the shaft (Hexahedron elements)

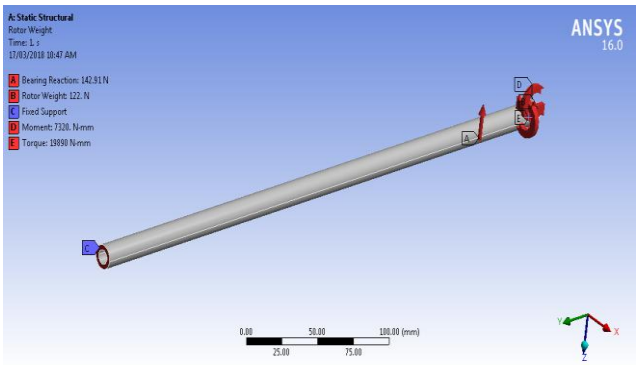


Fig 16: Loading (Rotor weight + Moment + Torque)

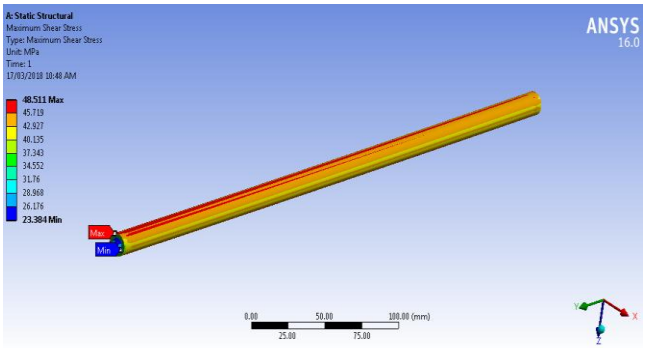


Fig 17: Shear Stress in Hollow shaft for loading (Rotor weight + Moment + Torque)

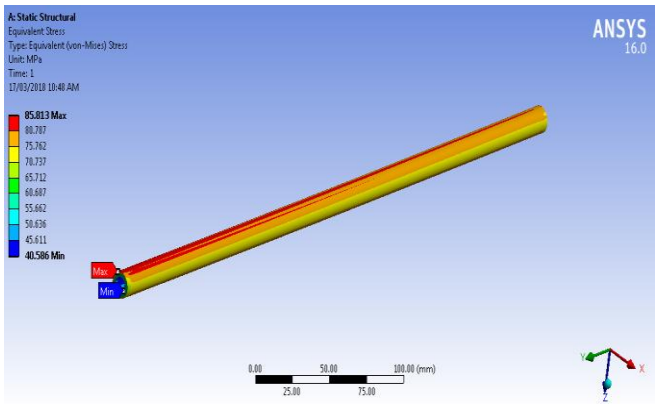


Fig 18: Von-mises Stress in Hollow shaft

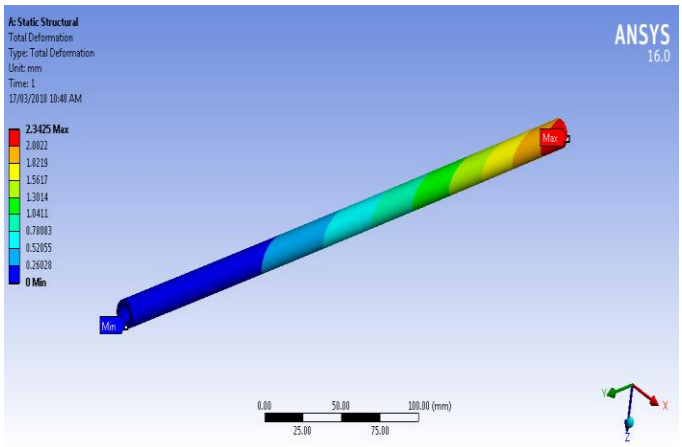


Fig 19: Deformation in Hollow shaft

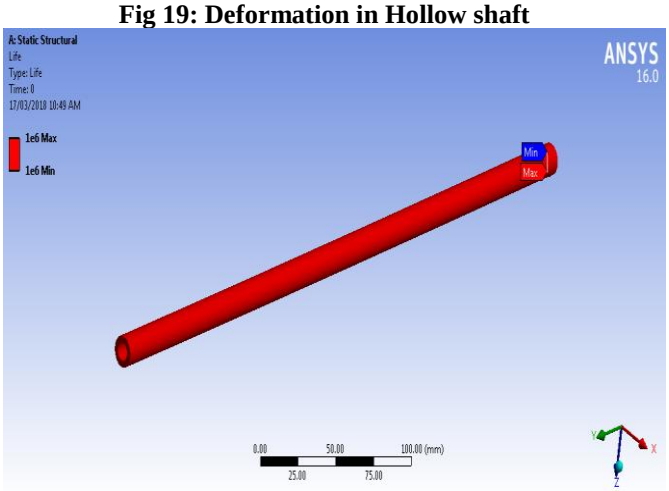


Fig 20: Life of the Hollow Shaft

### 3.4 Composite Solid shaft Analysis:

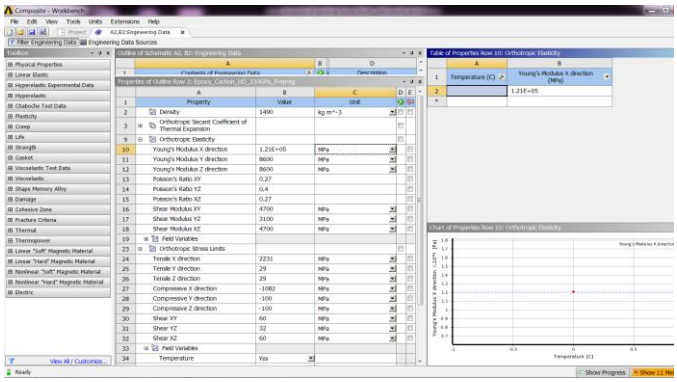

**Fig 21: Carbon Epoxy -UD (Uni-directional) and related properties**

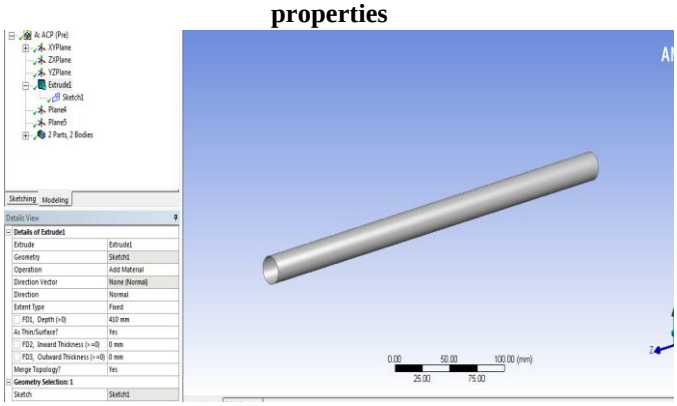

**Fig 22: Model created in ANSYS modeler**

### 3.4.1 Layer Formations: (Orientations 0/0/0/0)

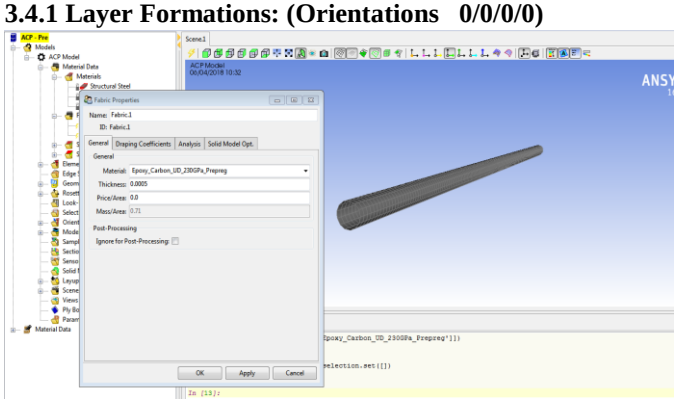

**Fig 23: Material application for plies – Total 4 layers each of 0.5 mm thickness**

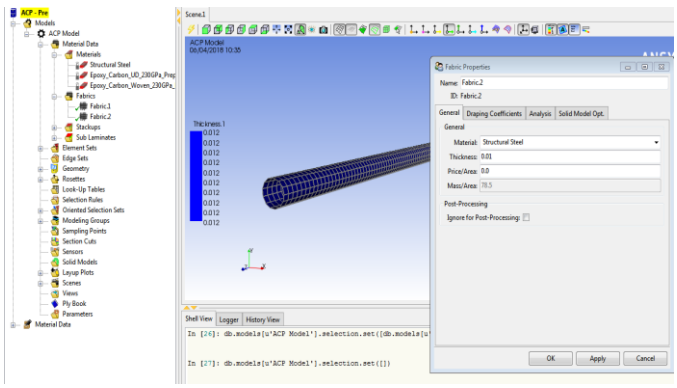

**Fig 24: Steel fiber application**

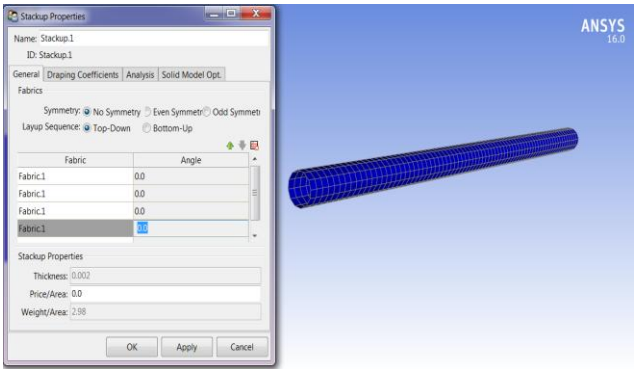

**Fig 25: Fiber orientations application**

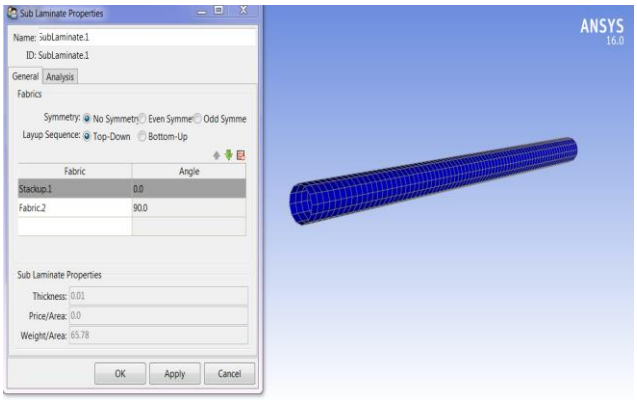

**Fig 26: Stacking of layers (From top: 0/0/0/0/Steel)**

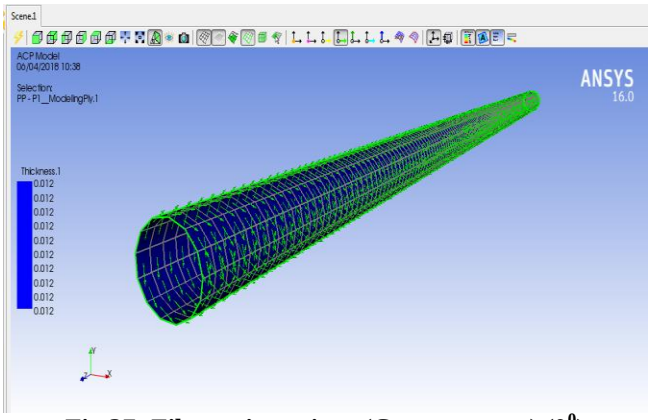

**Fig 27: Fiber orientations (Green arrows) ($0^0$)**

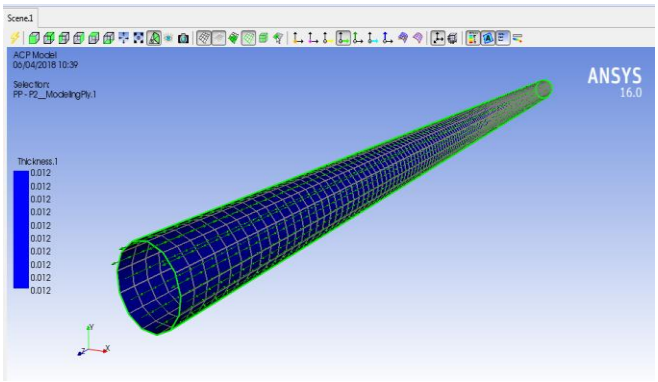

**Fig 28: Steel orientations**

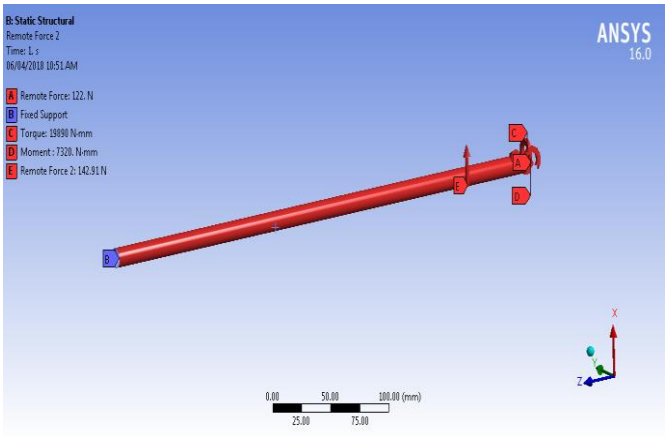


Fig 29: Boundary Conditions

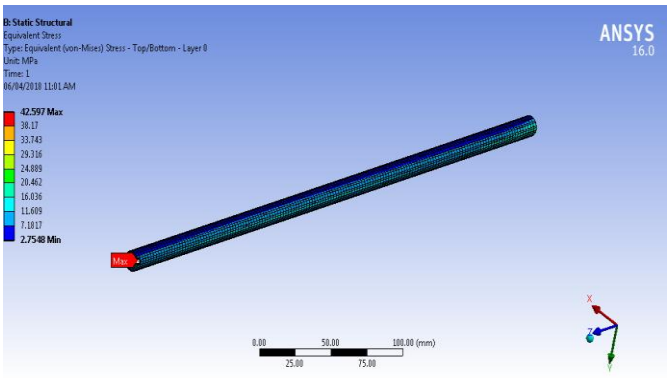


Fig 30: Stresses on Shaft

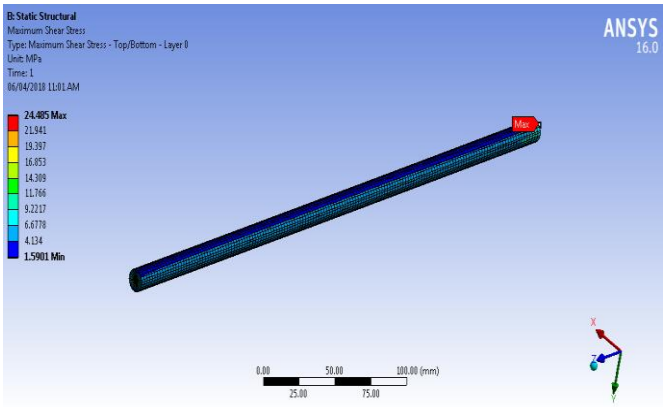


Fig 31: Shear Stresses on Shaft

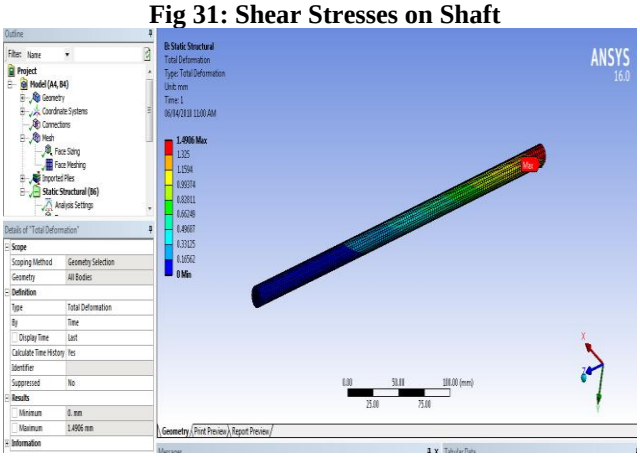


Fig 32: Deformation on Shaft

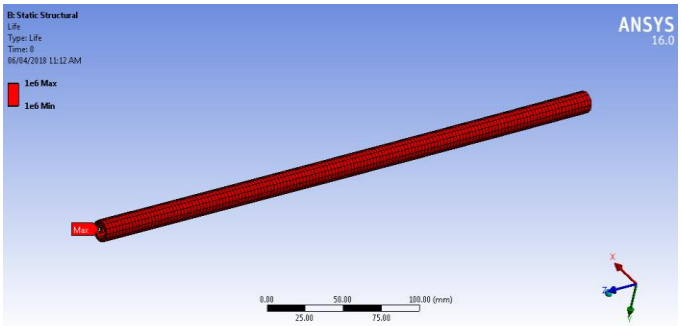


Fig 33: Life of the Shaft

**Table 1: Comparison of Solid steel, solid composite shaft and Hollow Shaft**

| | Stress, MPa | Shear Stress, MPa | Deforma-tion, mm | Life, cycles |
|---|---|---|---|---|
| Solid shaft | 119.2 | 68.298 | 3.3905 | 1.7e5 |
| Solid-Composite ECF UD-0/0/0/0 | 42.597 | 24.485 | 1.4906 | 1.0e6 (Infinite) |
| Hollow shaft | 85.813 | 48.511 | 2.3425 | 1.0e6 (Infinite) |

We can see from above results that composite shaft of same dimensions and loading gives very good results in stress, deformation as well as life; compared to solid shaft. So from this we get the scope for using the composite material for life improvement as well as weight reduction. We will use hollow shaft for the same purpose and will see the results based on composite materials at various fiber orientations.

## IV. OPTIMIZATION ANALYSIS

### *A. Optimization of shaft based on fiber orientation angle*

Fiber orientations are selected and FEA analysis is done using the same steps. The stress and deformation results are summarized in below table.

**Table 2: FEA results for different fibre orientations angles**

| **fiber Orientation** | **Von-mises Stress, MPa** | **Shear Stress, MPa** | **Deforma-tion, mm** | **Life, cycles** |
|---|---|---|---|---|
| **0/0/90/90** | 52.031 | 29.917 | 1.5286 | 1e6 |
| **90/90/0/0** | 55.168 | 31.716 | 2.1956 | 1e6 |
| **0/0/0/0** | 42.597 | 24.485 | 1.4906 | 1e6 |
| **90/90/90/90** | 74.572 | 38.569 | 3.3283 | 1e6 |
| **0/0/45/45** | 50.48 | 27.728 | 1.6816 | 1e6 |
| **45/45/0/0** | 31.271 | 16.341 | 1.5461 | 1e6 |
| **45/45/45/45** | 46.302 | 25.325 | 2.3812 | 1e6 |
| **45/45/90/90** | 60.796 | 31.526 | 2.5902 | 6.43e5 |
| **90/90/45/45** | 61.671 | 34.599 | 1.8821 | 5.80e5 |

From above results we can see that 45/45/0/0 orientations gives better results than others. Hence selected for further analysis.

*B. Analysis of selected torsion bar at 45/45/0/0 fiber orientations for different materials*

Material analysis is done using composite materials for 45/45/0/0 orientation angles and results are plotted in below table.

**Table 3: FEA results for UD and woven composite materials at 45/45/0/0 orientations**

| Sr No | Orienta-tions | Material | Stress, MPa | Shear stress, MPa | Deforma-tion, mm |
|---|---|---|---|---|---|
| 1 | 45/45/0/0 | Carbon Epoxy – UD | 31.271 | 16.341 | 1.5461 |
| 2 | 45/45/0/0 | Carbon Epoxy – Woven | 28.499 | 16.255 | 1.3741 |

From above results we can see that woven material gives better results than uni-directional (UD) orientation. But selecting the UD for further application due to cost consideration. Woven costing is nearly 2.5 times more than UD and comparatively stresses and deformation is not more in case of UD.

**4.2 Analysis of Carbon Epoxy with UD at (45/45/0/0) orientation:**

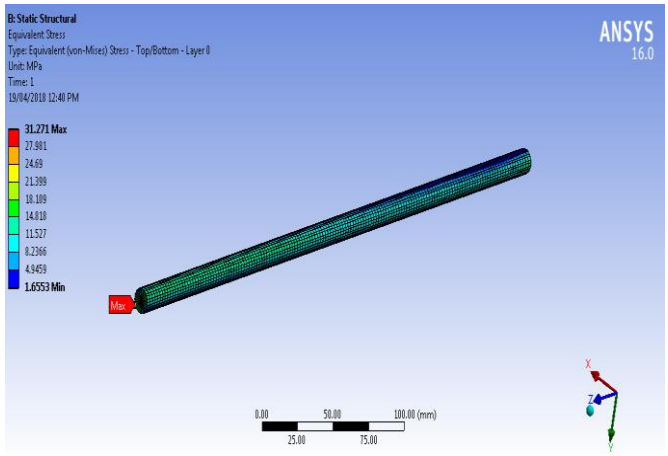


**Fig 34: Stresses on Shaft**

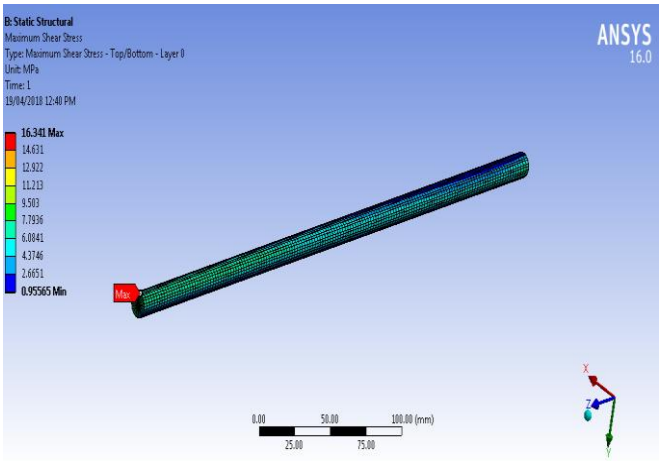


**Fig 35: Shear Stresses on Shaft**

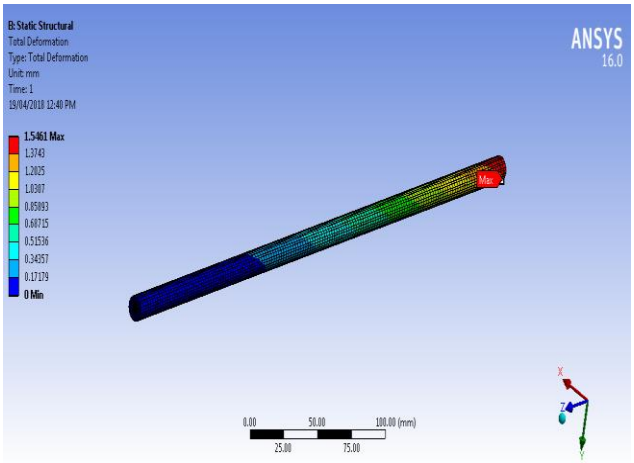


**Fig 36: Deformation on Shaft**

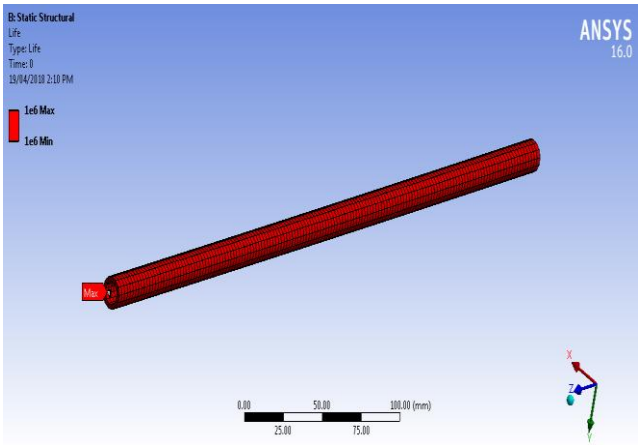


**Fig 37: Life of the Shaft**

## V. EXPERIMENTAL RESULTS

Experimentation is done for analyzing the shaft for life cycles. The results for the fatigue test are as follows;

**Table 4: Experimental life testing**

| Observation for Shaft life | | |
|---|---|---|
| **Parameter** | **Allowed Limit** | **Life, cycles (Recorded during trial)** |
| Shaft - Carbon Epoxy UD at (45/45/0/0) orientation Life | Infinite (1.0e6 cycles) | 1.0e6 cycles |

**Fig 38: Experimental Setup**

## VI. RESULTS AND DISCUSSION

- From existing analysis we get that stresses generated are shear stress 68.298 MPa, von-mises stress 119.2 MPa and deformation is 3.3905 mm; while from optimized analysis we can see that Stresses are shear stress 16.341 MPa, von-mises stress 31.271 MPa and deformation is 1.5461 mm.
- FEA life is 1e6 cycles and experimental life is also infinite cycles.

## VII. CONCLUSION

- Orientation optimization study is done and Final orientations selected are 45/45/0/0.
- Material optimization is done and carbon epoxy-UD material is suggested.
- Stresses and Deformation are less for optimized selection than existing shaft.
- FEA and Experimental fatigue test results for life of optimized shaft shows similar results.

## REFERENCES


1. Chris J. Burgoyne, Cambridge, UK "Advanced Composites in Civil Engineering in Europe" at Structural Engineering International report 4/99.
2. Branislav Duleba, Frantisek Greskovic " Simulation of Loading the Polymer/Carbon Fiber Composites and Prediction of Safety Factors" at International Journal of Engineering and Innovative Technology (IJEIT) ISSN: 2277-3754, Volume 2, Issue 8, February 2013
3. Darren A. Baker, Timothy G. Rials "Recent Advances in Low-Cost Carbon Fiber Manufacture from Lignin" at Journal of Applied Ploymer Science DOI: 10.1002/APP.39273, 2013.
4. Luiz Claudio Pardini, Maria Luisa Gregori "Modeling elastic and thermal properties of 2.5D carbon fiber and carbon/SiC hybrid matrix composites by homogenization method" at International Journal of Aerospace Technology Management, Sao Jose dos Campos, Vol.2, No.2, pp. 183-194, May-Aug., 2010.
5. Patil Deogonda, Vijaykumar N Chalwa "Mechanical Property of Glass Fiber Reinforcement Epoxy Composites" at International Journal of Scientific Engineering and Research (IJSER) ISSN (Online): 2347-3878 Volume 1 Issue 4, December 2013.
6. H. Kim, H. T. Hahn, E. Bekyarova, E. Oh, G. Lee "Carbon Fiber Composites Reinforced With Carbon Nanomaterials" at 18th International Conference On Composite Materials.
7. Mark Bruderick, Douglas Denton and Michael Shinedling, 0f DaimlerChrysler Corporation and Michael Kiesel, Quantum Composites Inc. "Applications of Carbon Fiber Smc for the Dodge Viper" Case Study.


## AUTHORS PROFILE

**Mrs. Swati Dhartiraj Pawar,** Completed M.E. in Mechanical Engineering (Design) from Shivaji University, Kolhapur. Interested research work in Design in Manufacturing Engineering. Recently working as Asst. Prof. in Dnyanshree Institute of Engineering & Technology, Sajjangad road, Satara, Maharashtra, India.

**Mr. Rohit Pramod Badde** Completed M. Des - Transportation Design from Institute of Applied Arts and Design (IAAD), Turin, Italy. Interested research work in Manufacturing processes & Transportation Design. Recently working as Asst. Prof. in Dnyanshree Institute of Engineering & Technology, Sajjangad road, Satara, Maharashtra, India.

**Ms. Trupti Gopal Raut** Completed M.E. in Mechanical Engineering (Production) from Shivaji University, Kolhapur. Interested research work in Manufacturing processes. Recently working as Asst. Prof. in Dnyanshree Institute of Engineering & Technology, Sajjangad road, Satara, Maharashtra, India.

**Mr. Amit Sunil Chorge** Completed M.Tech. in CAD-CAM from Shri Guru Gobind Singhji Institute of Engineering and Technology. Interested research work in Design & Manufacturing Processes. Recently working as Asst. Prof. in Dnyanshree Institute of Engineering & Technology, Sajjangad road, Satara, Maharashtra, India.

**Mr. Onkar Vijay Dixit** Completed M.E. in Energy System & Management from Mumbai University. Interested research work in Manufacturing processes & Renewable Energy sources utilization. Recently working as Asst. Prof. in Dnyanshree Institute of Engineering & Technology, Sajjangad road, Satara, Maharashtra, India.