International Journal of Innovative Technology and Exploring Engineering (IJITEE)
ISSN: 2278-3075 (Online), Volume-9 Issue-8, June 2020

Realization of Linear and Non-linear circuits with Variable Gain DVCC

Ramkrishna V. Yenkar, Manoj Kumar Nigam

Abstract*: *The analog circuits are two types; linear and non-linear. The analog circuits are, might be, with or without feedback. In general, linear circuits need negative feedback while negative or positive feedback needed in non-linear circuits. Here, the VG-DVCC is proposed for the realization of linear and non-linear circuits. Basically, this VG-DVCC is a low-gain active network block. Thus, feedback is not needed for the realization of linear circuits whereas non-linear circuits needed feedback.

This paper highlights the realization of linear circuits: Instrumentation Amplifiers, Active Filters, and nonlinear circuits: Schmitt Trigger comparator, Square wave generator with variable gain differential voltage current conveyor. The performance is validated by simulation using ADS.

Keywords*: *Current Conveyor, Instrumentation Amplifier, Linear and nonlinear circuits, Square wave Generator.

I. INTRODUCTION

The analog electronic circuits are classified as linear circuits and nonlinear circuits. The linear analog circuits are two types: frequency independent and frequency-dependent input-output relation [1]. The linear analog circuits are obeying the equation of a line [2, 3], or in other words output of the circuit is directly proportional to an input signal applied [4, 5]. In linear circuits, the main active network block (ANB) needs to be operated in an active region. In general, the voltage mode active network block has high gain; thus, with a small input excitation, ANB enters into saturation. To overcome this or to maintain linearity, the negative (degenerative) feedback is employed to the voltage mode ANB. Another way to maintain linearity is to use a low-gain or unity gain current mode ANB. Frequency-independent linear circuits are different types of amplifiers, the voltage to current converter, current to voltage converter, analog computing circuits, and Frequency-dependent linear circuits are active filters [1]. The nonlinear circuits are three types: Diode Function Generators (precision rectifier, log/antilog, PWL -Piece-wise linear), Hysteretic waveforms Generator (Schmitt Trigger comparator, square wave generator), and Sustained (sine wave oscillators) waveform generator.

Revised Manuscript Received on June 30, 2020.
* Correspondence Author
Ramkrishna V. Yenkar*, department of electronics and electrical engineering, School of Engineering and IT, MATS University, Raipur, India. Email:rvyenkar@gamil.com
Manoj Kumar Nigam, department of electrical and electronics engineering, School of Engineering and IT, MATS University, Raipur, India., Email: nigam74_123@yahoo.com

In Diode Function Generators and Sustained Oscillation circuits, ANB operates in an active region whereas in hysteretic circuits it operates in a saturation region. The input-output characteristic of the nonlinear circuit is not having a straight line [2, 3] or in other words output of the circuit is not directly proportional to an input signal applied [4, 5]. The degenerative (negative) feedback is employed to ANB for diode function generator and regenerative (positive) feedback for hysteretic or sustained waveform generator.

The linear and nonlinear circuits are realized by using both voltage mode and current mode ANB. The current mode ANB offers better performance than voltage mode ANB [6]. Here a novel current-mode ANB, the VG-DVCC is proposed for the realization of linear and nonlinear circuits.

II. THE VG-DVCC

The proposed active network block VG-DVCC [7] (Variable-Gain Differential-Voltage-Current-Conveyor) has three types: positive, negative, and dual out. The dual out VG-DVCC can be used as positive out, negative out, or dual out, hence it is preferred here. It has five ports Y1, Y2, X, Z-, Z+, and three additional terminals p, q, and r. The variable gain can be achieved by connecting two external impedances Z_1 between p-q and a grounded Z_2 at r. Fig 1 shows its Symbolic Representation.

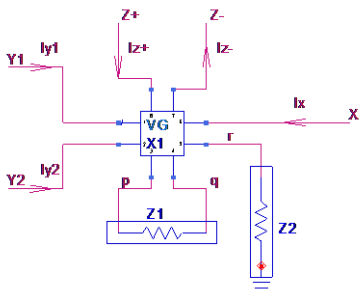

Figure 1: Symbol of VG-DVDOCC

The port characteristics of VG-DVDOCC are expressed by Matrix as given below in equation-1.

$$\begin{bmatrix} Iz- \\ Iz+ \\ Vx \\ Iy1 \\ Iy2 \end{bmatrix} = \begin{bmatrix} 0 & 0 & -1 & 0 & 0 \\ 0 & 0 & +1 & 0 & 0 \\ 0 & 0 & 0 & A & -A \\ 0 & 0 & 0 & 0 & 0 \\ 0 & 0 & 0 & 0 & 0 \end{bmatrix} \begin{bmatrix} Vz- \\ Vz+ \\ Ix \\ Vy1 \\ Vy2 \end{bmatrix} \quad ..(1)$$

Where $A = Z_2/Z_1$ is a variable gain.

III. Realization of Linear Circuits

The current conveyor -II is a convenient ANB that offers the simplified design of linear circuits. In 2012, Yenkar et al [5] recapitulate the design of seven different amplifiers, five analog computing circuits, impedance converters, and active filters. For the implementation of some linear circuits need more than two CCII. Up-to three CCII based circuits can be designed using a single VG-DVCC. The designing of single CCII based circuit using VG-DVCC will be underutilization. Here, only two frequency-independent and one frequency-dependent linear circuits are elaborated. Those are voltage-out instrumentation amplifier, current-out instrumentation amplifier and Triple out Active Filter.

A. Voltage-out Instrumentation Amplifier

The Voltage-out instrumentation amplifier is a special type of differential amplifier with high input impedance and high CMRR which makes it suitable for the measurement of small signals even in a noisy environment. In the Instrumentation amplifier, the signal referred to differential voltage and noise to common or average of the input voltages. Generally, the instrumentation amplifier is used for the measurement of bio-potential in medical electronics; signal processing and data acquisition of other physical quantities [8]. In 2005, Ghallab et al [8] had given a comparison of the current mode Instrumentation amplifier which shows that the Researcher developed/proposed an instrumentation amplifier with two CCII, three CCII, two CCII with two Op-amps and two OFCC (Operational Floating Current Conveyor). The proposed Instrumentation amplifier is as shown in fig. 2, which has a one VG-DVCC (with optional voltage follower to drive poor input impedance stage). The output of this Inst-Amp can be taken from the voltage follower or P node.

$$\text{Thus } V_O = V_P = R_4/R_3 \times V_X \qquad (2)$$

From characteristics matrix eq. (1)

$$V_X = A\,(V_{Y1} - V_{Y2}) \qquad (3)$$

$$\text{Where } A = R_2/R_1 \qquad (4)$$

Therefore, from eq. (2), (3) and (4)

$$V_O = R_2/R_1 \times R_4/R_3 \times (V_{Y1} - V_{Y2}) \qquad (5)$$

Thus differential mode gain of Inst-Amp is $A_{dm} = R_4R_2/R_1R_3$

In general, the output of inst-amp has a contribution of the differential-mode as well as the common-mode signals which expressed as follows.

$$V_O = A_{dm}\,(V_{Y1} - V_{Y2}) + A_{cm}\,((V_{Y1} + V_{Y2})/2) \qquad (6)$$

$$V_O = A_{dm}\,V_d + A_{cm}\,V_C \qquad (7)$$

Simulating it for exclusively for differential signal by applying Vy1 = 0.5sinωt mV and Vy2 = -0.5sinωt mV with R_1 =50kΩ, R_2 =500kΩ, R_3=100kΩ and R_4=1MΩ which theoretically results into V_d = 1sinωt mV, V_C= 0, A_{dm}=100 and V_O=0.1sinωt V.

From simulation result shown in fig 2(b) has V_O= 0.1sinωt which gives A_{dm}= 100, Hence, the theoretical value of A_{dm} matches with simulated.

Now, simulating for common-mode gain Acm, let us apply Vy1=Vy2=1sinωt mV which gave V_{Cmax}=½*$(V_{Y1}+V_{Y2})$ =1mV and V_{dmax} = 0.

From simulation result fig 2(c) shows V_{Omax} = 93.27fV

Hence Acm =(93.27fV/1mV) = $93.27*10^{-12}$.

So CMRR=20 $\log_{10}{}^{(Adm/Acm)}$ = 20 $\log_{10}{}^{(100/93.27e\text{-}15)}$ = 281dB. which is very high.

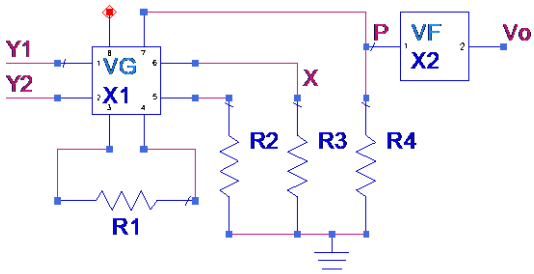

(a)

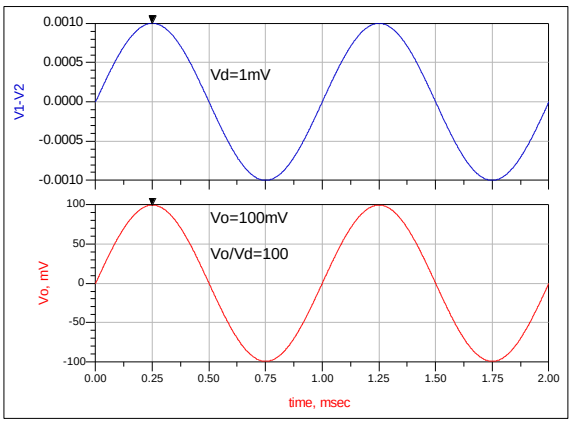

(b)

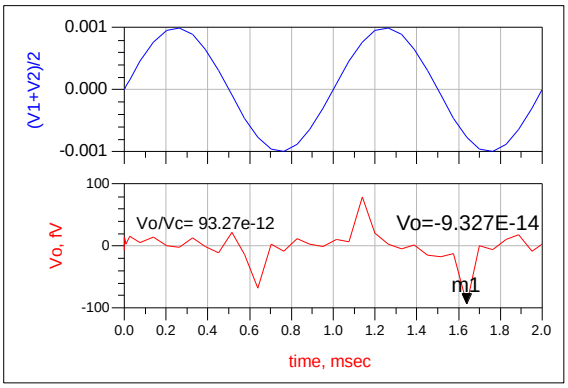

(c)

Fig. 2(a): Instrumentation Amplifier Circuit (b) differential Input-Output waveforms for difference signal (c) Common-mode Input-Output waveforms for common-mode signal

B. Current-out Instrumentation Amplifier

When the signal needs to be transmitted over long wires, the stray resistance degrades the voltage signal but does not degrade the current signal [1].

Hence, for long wire transmission current-out Inst Amp is preferred. The Circuit of the Current-out Inst Amp is shown in fig. 3(a). Here I_{zp} and I_{zn} are two current outputs. From the characteristics matrix eq. (1), the current flowing through X port gets reflected at Zp port and out of phase at Zn port. It is mathematically expressed as follows. I_{zp} = Ix, I_{zn} = -Ix and Ix = Vx/R_3.

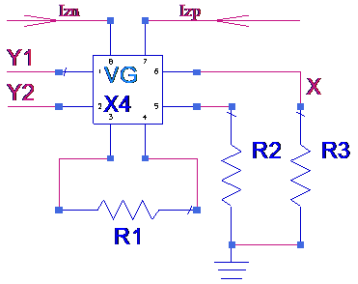

(a)

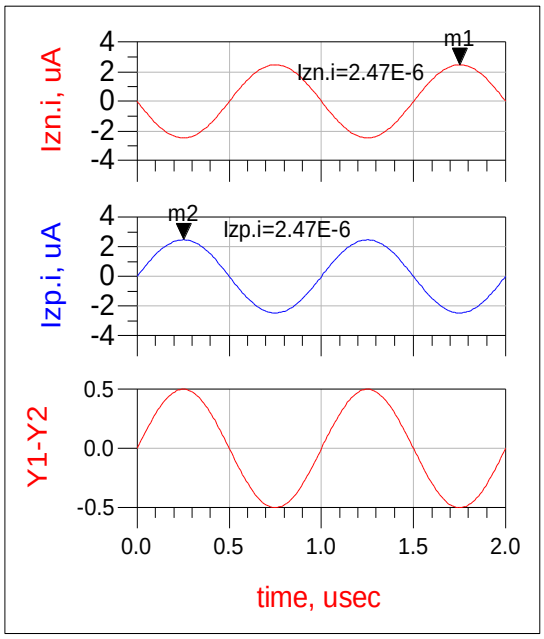

(b)

Fig. 3(a): Current-out Instrumentation Amplifier Circuit (b) Composite Input-Output waveforms of differential voltage signal and corresponding current outputs

$$\therefore I_{zp} = A\times (V_{Y1}+V_{Y2})/R_3 = \alpha\,(V_1 - V_2) \qquad (8)$$

$$\therefore I_{zn} = -\,A\times (V_{Y1}+V_{Y2})/R_3 = -\,\alpha\,(V_1 - V_2) \qquad (9)$$

The current flowing through Zp terminal and Zn terminal is proportional to the differential voltage applied at Y_1 and Y_2. The proportionality constant $\alpha=R_2/R_1R_3$ is called differential voltage to current transfer ratio (gain). In the circuit of fig. 5(a), R_1 = R_2 = 300KΩ and R_3=200KΩ. Therefore α = R_2/R_1R_3 = $2.5*10^{-6}$. From simulation result, differential voltage to current transfer ratio (gain) $\alpha = 2.47*10^{-6}$.

C. Triple-out Active Filter

The proposed triple-out Active Filter circuit as shown in Fig. 4(a) is a composite active filter. It is a combination of three filters, namely low-pass, high-pass and band-pass filter.

The generalized s-domain standard form of transfer function [9, 10] of second-order active filter is given below.

$$H(s) = N(s) / ((s^2/\omega_n^2) +(s/Q\omega_n) +1) \qquad (10)$$

For the circuit 4(a),

$$Vo_{LP}/Vi = 1 / ((RCs)^2 + RCs + 1) \qquad (11)$$

$$Vo_{HP}/Vi = (RCs)^2 / ((RCs)^2 + RCs + 1) \qquad (12)$$

$$Vo_{BP}/Vi = RCs / ((RCs)^2 + RCs + 1) \qquad (13)$$

- *Low-pass filter:* N(s) = k, where k is DC gain. From (10) and (11), DC gain=1 or 0 dB, Q=1 and ω_n= 1/RC.
- *High-pass filter:* N(s) = ks^2/ω_n^2, where k is high frequency gain. From (10) and (12), high frequency gain=1 or 0 dB, Q=1 and ω_n= 1/RC.
- *Band-pass filter:* N(s) = $ks/Q\omega_n$, where k is maximum gain. From (10) and (13), maximum gain=1 or 0 dB at ω_n, Q=1 and ω_n= 1/RC.

For simulation R_1= R_2= R_3= R_4= R_5= 500k and C_2= C_3= C_4=1pF which gives theoretical center frequency f_n =318 KHz and from frequency response shown in fig. 4(b) gives 317KHz.

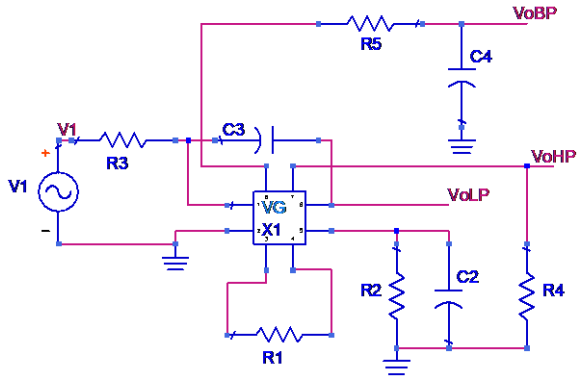

(a)

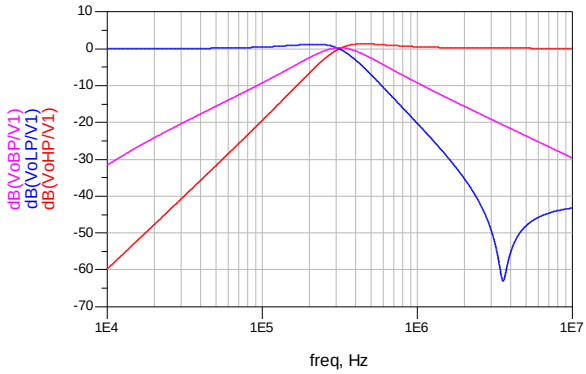

(b)

Fig. 4(a): Triple-out Active Filter Circuit (b) Composite frequency response of Low-pass, Highpass, and Band-pass

IV. Realization of Non-Linear Circuits

The current conveyor is basically a linear ANB but it can be configured and used in the non-linear circuit realization. It can be achieved by employing positive feedback or by connecting the non-linear components to any of the port. Here only hysteretic non-linear circuits are proposed.

A. Schmitt trigger comparator

If regenerative feedback is applied to the Y_1 input of VG-DVCC, the gain can be increased significantly.This forces output currents to change between the extreme values.

Voltage feedback is needed as Y_1 is a voltage input that can be achieved by converting current into voltage through resistive voltage divider network using resistive network R_1 and R_2. Fig 5(a) is a Schmitt Trigger comparator. It has a regenerative connection that exhibits hysteresis as shown in Fig 5(b). The input-output waveforms are shown in fig 5(c).

In this circuit the regenerative feedback is connected to Y_1 input, it can be connected to Y_2 input also. In the VG-DVCC, any input can act as a inverting and non-inverting.

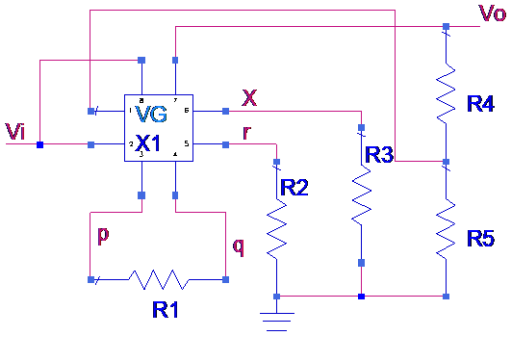

(a)

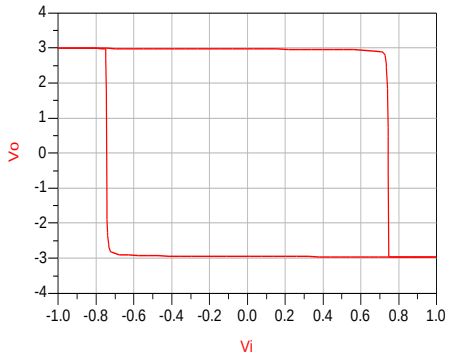

(b)

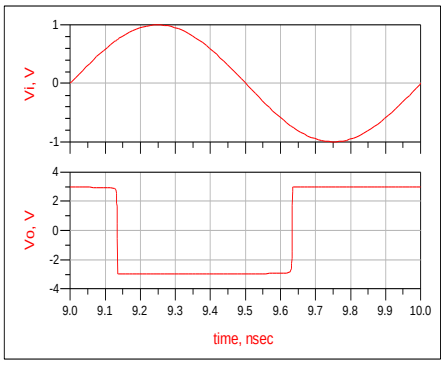

(c)

Fig. 5(a): Schmitt trigger comparator Circuit Diagram (b)Hysteresis phenomenon (c): Input-Output wave forms of Schmitt trigger circuit

B. Square wave Generator

A square wave generator circuit using VG-DVCC is shown in fig 6(a). It has a combination of Schmitt trigger comparator, voltage follower, and RC timing components. The grounded capacitor connected to Y_1 input voltage which tied up through resistance to output voltage Vo. This circuit generates free-running oscillation and square wave voltage waveform is observed at the output of the voltage follower and the frequency of oscillation is controlled by charging-discharging of the capacitor. The Charging-discharging curve of the capacitor and the output voltage waveform is as shown in fig 6(b).

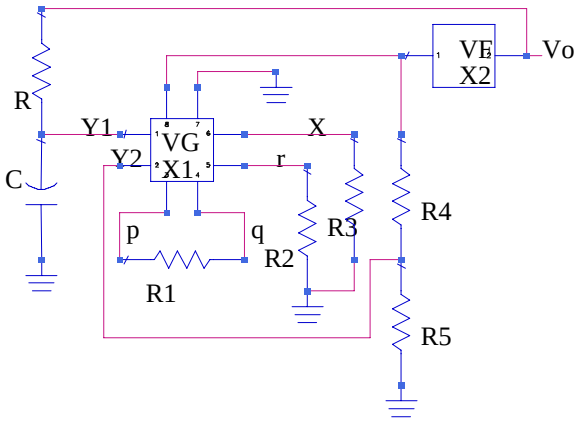

(a)

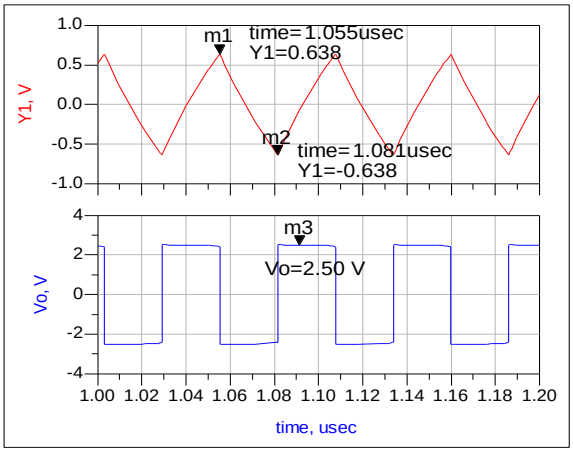

(b)

Fig. 6 (a): Square Wave Generator Circuit (b): Important waveforms of the square wave generator

The frequency of a square wave is f=1/T, where T is periodic time. Here duty cycle is 50%, thus frequency can be find-out by determining T/2. The capacitor charge from $-V_T$ (threshold voltage) to $+V_{sat}$ but it actually charges up-to + V_T and the time required for charging is T/2. Here V_T = ¼ V_{sat}.

The Eq. 14 is a generalized equation for a periodic time [1].

$$T = 2RC \ln[(V_{sat} + V_T)/(V_{sat} - V_T)] \quad (14)$$

$$T=2RC \ln(5/3) = 1.02RC \quad (15)$$

For simulation R_1= R_2= 300k, R_3= 200k, R_4= R_5= R=500k and C = 0.1pF which gives theoretical free running frequency f =1/T = 19.6 MHz and from capacitor charging response shown in fig. 6(b) gives T/2 = 0.0256µS and which gives the free running f =19.54 MHz.

V. CONCLUSION

The VG-DVCC is a universal active network block that is capable to synthesize all the linear and non-linear circuits.

The proposed voltage-out and current-out Instrumentation Amplifier offers a very high CMRR and there is no requirement of matching resistances.

The Active filter proposed is able to provide low-pass, high-pass, and band-pass responses but there is a requirement of matching resistances and capacitances. The nature of VG-DVCC is to accept dual and differential voltage input which utilized to configure a variable reference regenerative Schmitt trigger comparator and a square wave generator. Many circuits such as sine wave oscillator, precision rectifier, PWL non-linearity, Impedance converter, and analog computing circuits can be synthesized using VG-DVCC.

ACKNOWLEDGMENT

The authors are grateful to the MATS University.

REFERENCES

1. Franco, S. *Design with operational amplifiers and analog integrated circuits*. New York: McGraw-Hill, 1988, pp. 42-95
2. Parodi, M., & Storace, M. *Linear and nonlinear circuits: Basic & advanced concepts.* New York: Springer, 2018
3. The basics of linear vs. nonlinear circuits. [Blog] (2019, August 29). Retrieved from https://resources.pcb.cadence.com/blog/2019-the-basics-of-linear-vs-nonlinear-circuits
4. Agarwal T. "What Are Linear and Non-Linear Circuits and It's Differences?" *ElProCus*, 2013. https://www.elprocus.com/ linear-and-non-linear-circuit-with-differences/
5. The Main Difference between Linear and Nonlinear Circuit, [Article] (2013). Retrieved from https://www.electricaltechnology.org/2013/12/ the-main-difference-between-linear-and-nonlinear-circuits.html/
6. Yenkar R. V., Pande R. S., & Limaye S. S. (2012, March). The Survey of Historical-Technical Development in Current Conveyors and Their Applications. In *IJCA Proceedings on National Conference on Innovative Paradigms in Engineering and Technology (NCIPET 2012) ncipet (4)* (pp. 17-23).
7. Yenkar Ramkrishna & Nigam Manoj Kumar. (2019, December). "Design and Simulation of Novel Variable Gain Differential Voltage Current Conveyor", *International Conference on Innovative Trends and Advances in Engineering and Technology* (*ICITAET-2019)*.
8. Ghallab, Y. H., Badawy, W., Kaler, K. V., & Maundy, B. J. (2005). A novel current-mode instrumentation amplifier based on the operational floating current conveyor. *IEEE Transactions on Instrumentation and Measurement*, *54*(5), 1941-1949.
9. Zumbahlen H, editor. *"Chapter 8: Analog Filters",* Linear Circuit Design Handbook. Newnes, Aug. 2011.
10. McNames J., Second-Order Filters Overview. [PPT], Retrieved from http://www.kves.uniza.sk/kvesnew/dokumenty/DREP/Filters/Second OrderFilters.pdf

AUTHORS PROFILE

Ramkrishna V. Yenkar has received his B.E. in Industrial Electronics from SSGMCE, Shegaon, India and M.Tech in Electronics from VNIT, Nagpur, India. He has more than 31 years of experience in teaching, administration and research. He has published 19 research papers in national and international conferences and Journals. His field of interest includes Educational Technology, Analog / Digital systems, Current Conveyor and chaotic in nonlinear systems.

Dr. Manoj Kumar Nigam has received the B.E. and ME degree in Electrical Engineering from MITS Gwalior, M.P., India and Ph.D. in Electrical Engineering from R.K.D.F University, Bhopal (M.P), India. He has more than 18 years of experience in teaching and research. He has published 35 research papers in national and international conferences and Journals. His current research focuses on Distributed generation, power electronic drives, current conveyors and power quality issues in the Power System.